J. Math. Computer Sci., 31 (2023), 318–337

Online: ISSN 2008-949X

Journal of Mathematics and Computer Science

Journal Homepage: www.isr-publications.com/jmcs

Three new concepts of Pythagorean fuzzy soft UP (BCC)-filters

Akarachai Satirad[a], Rukchart Prasertpong[b], Pongpun Julatha[c], Ronnason Chinram[d], Pattarawan Singavananda[e], Aiyared Iampan[a,*]

[a] *Fuzzy Algebras and Decision-Making Problems Research Unit, Department of Mathematics, School of Science, University of Phayao, Mae Ka, Mueang, Phayao 56000, Thailand.*

[b] *Division of Mathematics and Statistics, Faculty of Science and Technology, Nakhon Sawan Rajabhat University, Nakhon Sawan 60000, Thailand.*

[c] *Department of Mathematics, Faculty of Science and Technology, Pibulsongkram Rajabhat University, Phitsanulok 65000, Thailand.*

[d] *Division of Computational Science, Faculty of Science, Prince of Songkla University, Hat Yai, Songkhla 90110, Thailand.*

[e] *Program in Mathematics, Faculty of Science and Technology, Songkha Rajabhat University, Songkhla 90000, Thailand.*

Abstract

This paper seeks to introduce novel concepts on Pythagorean fuzzy soft sets (PFSSs) over UP (BCC)-algebras. Then, we give three different types of PFSSs over UP (BCC)-algebras and look into their generalization. We also find the results of four operations over UP (BCC)-algebras performed on two PFSSs: union, restricted union, intersection, and extended intersection. We also discuss π-level subsets of PFSSs over UP (BCC)-algebras as a final step in our inquiry into the relationships between special subsets of UP (BCC)-algebras and PFSSs.

Keywords: UP (BCC)-algebra, Pythagorean fuzzy set, Pythagorean fuzzy soft set, operation, π-level subset.

2020 MSC: 03G25, 03E72, 08A72.

1. Introduction and preliminaries

In 1965, Zadeh [43] became the first person to think of fuzzy sets (FSs). Numerous mathematical and other domains have adopted the FS ideas of Zadeh and others. After the notion of FSs was introduced, several scholars were questioned about its generalizations, including those for intuitionistic fuzzy sets (IFSs) [3], hesitant fuzzy sets (HFSs) [38, 39], Pythagorean fuzzy sets (PFSs) [41].

We are unable to employ conventional approaches in 1999 to resolve complex issues in engineering, economics, and the environment due to a number of inherent uncertainties in those issues. Traditional mathematical methods cannot be used to handle uncertainties; however, a variety of existing theories, including the theory of probabilities, FSs, IFSs, vague sets, interval mathematics, and rough sets, can be used to do so. However, each of these ideas has its own flaws, which are discussed in [20]. Maji et al.

*Corresponding author

Email addresses: akarachai.sa@gmail.com (Akarachai Satirad), rukchart.p@nsru.ac.th (Rukchart Prasertpong), pongpun.j@psru.ac.th (Pongpun Julatha), ronnason.c@psu.ac.th (Ronnason Chinram), pattarawan.pe@skru.ac.th (Pattarawan Singavananda), aiyared.ia@up.ac.th (Aiyared Iampan)

doi: 10.22436/jmcs.031.03.07

Received: 2022-12-30 *Revised:* 2023-01-28 *Accepted:* 2023-02-07

[19] demonstrated an application of fuzzy soft sets in a decision-making issue in 2001 and introduced the idea of fuzzy soft sets as an extension of the conventional soft sets. Rehman et al. [22] explored the characteristics of fuzzy soft sets and how they relate to various operations, including union, intersection, restricted union, and extended intersection. They use counter examples to show the features of the AND and OR operations. The notion of PFSSs was developed in 2015 by Peng et al. [21], who also described the operations complement, union, intersection, and, or, addition, multiplication, necessity, and possibility. The links between (prime, weakly prime) hesitant fuzzy UP-subalgebras/UP-filters/UP-ideals/strong UP-ideals and various level subsets of a HFS on UP-algebras were studied by Satirad et al. [32] in 2017. In 2018, Satirad et al. [27] developed eight different kinds of FSs of fully UP-semigroups and looked into the algebraic characteristics of these sets when intersection and union are used. Ten different forms of fuzzy soft sets were developed over fully UP-semigroups in 2019 by Satirad and Iampan [28, 29], who also studied the algebraic characteristics of fuzzy soft sets under the operations of (extended) intersection and (restricted) union. In 2020, Touqeer [40] proposed the concept of intuitionistic fuzzy soft α-ideals in BCI-algebras. In 2022, Satirad et al. [24, 26] analyzed π-level subsets of rough PFSs in order to apply the notion of rough sets to PFSs in UP-algebras. The same year, Satirad et al. [33] explored the operations of PFSSs over UP-algebras and described π-level subsets of PFSSs. The concepts of UP-algebras (see [7]) and BCC-algebras (see [18]) are the same concept, as shown by Jun et al. [14] in 2022. Our research team will use the term "BCC" rather than "UP" in this paper and any subsequent studies out of respect for Komori, who initially described it in 1984.

The novel ideas of PFSSs, namely Pythagorean fuzzy soft implicative BCC-filters/comparative BCC-filters/shift BCC-filters, are introduced to BCC-algebras in this article. The operations on the three different forms of PFSs are then examined, including the union, restricted union, extended intersection, and intersection. In order to talk about the connections between PFSSs and special subsets of BCC-algebras, we also explore π-level subsets of PFSSs over BCC-algebras.

The concept of BCC-algebras (see [18]) can be redefined without the condition (1.1) as follows.

Definition 1.1 ([6]). An algebra $\mathfrak{R} = (\mathfrak{R}, \star, 0)$ of type $(2, 0)$, where a set $\mathfrak{R} \neq \emptyset$, $\star$ is a binary operation on $\mathfrak{R}$, and $0 \in \mathfrak{R}$, is referred to as a *BCC-algebra* if it adheres to the following axioms:

$$\begin{aligned}
&(\forall \iota, \kappa, \sigma \in \mathfrak{R})((\kappa \star \sigma) \star ((\iota \star \kappa) \star (\iota \star \sigma)) = 0),\\
&(\forall \iota \in \mathfrak{R})(0 \star \iota = \iota),\\
&(\forall \iota \in \mathfrak{R})(\iota \star 0 = 0),\\
&(\forall \iota, \kappa \in \mathfrak{R})(\iota \star \kappa = 0, \kappa \star \iota = 0 \Rightarrow \iota = \kappa).
\end{aligned}$$

For more examples of BCC-algebras, see [1, 2, 4, 8, 10, 30, 31, 34, 35].

We shall assume that $\mathfrak{R}$ is a BCC-algebra $(\mathfrak{R}, \star, 0)$ unless otherwise stated. The statements listed below are true for $\mathfrak{R}$ (see [7, 8]).

$$\begin{aligned}
&(\forall \iota \in \mathfrak{R})(\iota \star \iota = 0), \qquad (1.1)\\
&(\forall \iota, \kappa, \sigma \in \mathfrak{R})(\iota \star \kappa = 0, \kappa \star \sigma = 0 \Rightarrow \iota \star \sigma = 0),\\
&(\forall \iota, \kappa, \sigma \in \mathfrak{R})(\iota \star \kappa = 0 \Rightarrow (\sigma \star \iota) \star (\sigma \star \kappa) = 0),\\
&(\forall \iota, \kappa, \sigma \in \mathfrak{R})(\iota \star \kappa = 0 \Rightarrow (\kappa \star \sigma) \star (\iota \star \sigma) = 0),\\
&(\forall \iota, \kappa, \sigma \in \mathfrak{R})(\iota \star (\kappa \star \iota) = 0, \text{ in particular, } (\kappa \star \sigma) \star (\iota \star (\kappa \star \sigma)) = 0),\\
&(\forall \iota, \kappa \in \mathfrak{R})((\kappa \star \iota) \star \iota = 0 \Leftrightarrow \iota = \kappa \star \iota),\\
&(\forall \iota, \kappa \in \mathfrak{R})(\iota \star (\kappa \star \kappa) = 0),\\
&(\forall \nu, \iota, \kappa, \sigma \in \mathfrak{R})((\iota \star (\kappa \star \sigma)) \star (\iota \star ((\nu \star \kappa) \star (\nu \star \sigma))) = 0),\\
&(\forall \nu, \iota, \kappa, \sigma \in \mathfrak{R})((((\nu \star \iota) \star (\nu \star \kappa)) \star \sigma) \star ((\iota \star \kappa) \star \sigma) = 0),\\
&(\forall \iota, \kappa, \sigma \in \mathfrak{R})(((\iota \star \kappa) \star \sigma) \star (\kappa \star \sigma) = 0),\\
&(\forall \iota, \kappa, \sigma \in \mathfrak{R})(\iota \star \kappa = 0 \Rightarrow \iota \star (\sigma \star \kappa) = 0),
\end{aligned}$$

$$(\forall \iota, \kappa, \sigma \in \mathfrak{R})(((\iota \star \kappa) \star \sigma) \star (\iota \star (\kappa \star \sigma)) = 0),$$
$$(\forall \nu, \iota, \kappa, \sigma \in \mathfrak{R})(((\iota \star \kappa) \star \sigma) \star (\kappa \star (\nu \star \sigma)) = 0).$$

Definition 1.2 ([5, 7, 9, 15–17, 37]). $\emptyset \neq S \subseteq \mathfrak{R}$ is called

(1) a *BCC-subalgebra* (BCCS) of $\mathfrak{R}$ if
$$(\forall \iota, \kappa \in S)(\iota \star \kappa \in S),$$

(2) a *near BCCF* (NBCCF) of $\mathfrak{R}$ if
$$(\forall \iota, \kappa \in \mathfrak{R})(\kappa \in S \Rightarrow \iota \star \kappa \in S),$$

(3) a *BCC-filter* (BCCF) of $\mathfrak{R}$ if
$$0 \in S, \quad (\forall \iota, \kappa \in \mathfrak{R})(\iota \star \kappa \in S, \iota \in S \Rightarrow \kappa \in S), \tag{1.2}$$

(4) an *implicative BCCF* (iBCCF) of $\mathfrak{R}$ if (1.2) and
$$(\forall \iota, \kappa, \sigma \in \mathfrak{R})(\iota \star (\kappa \star \sigma) \in S, \iota \star \kappa \in S \Rightarrow \iota \star \sigma \in S),$$

(5) a *comparative BCCF* (cBCCF) of $\mathfrak{R}$ if (1.2) and
$$(\forall \iota, \kappa, \sigma \in \mathfrak{R})(\iota \star ((\kappa \star \sigma) \star \kappa) \in S, \iota \in S \Rightarrow \kappa \in S),$$

(6) a *shift BCCF* (sBCCF) of $\mathfrak{R}$ if (1.2) and
$$(\forall \iota, \kappa, \sigma \in \mathfrak{R})(\iota \star (\kappa \star \sigma) \in S, \iota \in S \Rightarrow ((\sigma \star \kappa) \star \kappa) \star \sigma \in S),$$

(7) a *BCC-ideal* (BCCI) of $\mathfrak{R}$ if (1.2) and
$$(\forall \iota, \kappa, \sigma \in \mathfrak{R})(\iota \star (\kappa \star \sigma) \in S, \kappa \in S \Rightarrow \iota \star \sigma \in S),$$

(8) a *strong BCCI* (sBCCI) of $\mathfrak{R}$ if (1.2) and
$$(\forall \iota, \kappa, \sigma \in \mathfrak{R})((\sigma \star \kappa) \star (\sigma \star \iota) \in S, \kappa \in S \Rightarrow \iota \in S).$$

Definition 1.3 ([43]). A *fuzzy set* (FS) $\dot{V}$ in a set $\mathfrak{R} \neq \emptyset$ is characterized by its membership function $\top_{\dot{V}}$. This function assigns a real value $\top_{\dot{V}}(\iota)$ in $[0, 1]$ to each point $\iota \in \mathfrak{R}$. The real number $\top_{\dot{V}}(\iota)$ is understood for the point as the degree to which an object $\iota \in \mathfrak{R}$ is a member of the FS $\dot{V}$, i.e., $\dot{V} := \{(\iota, \top_{\dot{V}}(\iota)) \mid \iota \in \mathfrak{R}\}$.

Yager [41] and Yager and Abbasov [42] originally suggested the idea of PFSs in 2013.

Definition 1.4 ([41, 42]). A *Pythagorean fuzzy set* (PFS) $\ddot{W}$ in a set $\mathfrak{R} \neq \emptyset$ is characterized by its membership function $\top_{\ddot{W}}$ and non-membership function $\perp_{\ddot{W}}$. These functions connect the real numbers $\top_{\ddot{W}}(\iota)$ and $\perp_{\ddot{W}}(\iota)$ in $[0, 1]$ to each point $\iota \in \mathfrak{R}$ with the following restriction:
$$(\forall \iota \in \mathfrak{R})(0 \leqslant \top_{\ddot{W}}(\iota)^2 + \perp_{\ddot{W}}(\iota)^2 \leqslant 1).$$
The real numbers $\top_{\ddot{W}}(\iota)$ and $\perp_{\ddot{W}}(\iota)$ are understood for the point as the degree of membership and non-membership of an object $\iota \in \mathfrak{R}$ to the PFS $\ddot{W}$, respectively. This is expressed as $\ddot{W} := \{(\iota, \top_{\ddot{W}}(\iota), \perp_{\ddot{W}}(\iota)) \mid x \in \mathfrak{R}\}$. For the purpose of simplicity, a PFS $\ddot{W}$ is represented by the notation $\ddot{W} = (\top_{\ddot{W}}, \perp_{\ddot{W}})$. If $\top_{\ddot{W}}$ and $\perp_{\ddot{W}}$ of a PFS $\ddot{W}$ in $\mathfrak{R}$ are constant, then we say that the PFS is a *constant PFS*.

Definition 1.5 ([23, 25]). A PFS $\ddot{W} = (\top_{\ddot{W}}, \perp_{\ddot{W}})$ in $\mathfrak{R}$ is called

(1) a *Pythagorean fuzzy BCCS* (PFBCCS) of $\mathfrak{R}$ if
$$(\forall \iota, \kappa \in \mathfrak{R})(\top_{\ddot{W}}(\iota \star \kappa) \geqslant \min\{\top_{\ddot{W}}(\iota), \top_{\ddot{W}}(\kappa)\}), \quad (\forall \iota, \kappa \in \mathfrak{R})(\perp_{\ddot{W}}(\iota \star \kappa) \leqslant \max\{\perp_{\ddot{W}}(\iota), \perp_{\ddot{W}}(\kappa)\}),$$

(2) a *Pythagorean fuzzy NBCCF* (PFNBCCF) of $\mathfrak{R}$ if
$$(\forall \iota, \kappa \in \mathfrak{R})(\top_{\ddot{W}}(\iota \star \kappa) \geqslant \top_{\ddot{W}}(\kappa)), \quad (\forall \iota, \kappa \in \mathfrak{R})(\perp_{\ddot{W}}(\iota \star \kappa) \leqslant \perp_{\ddot{W}}(\kappa)),$$

(3) a *Pythagorean fuzzy BCCF* (PFBCCF) of $\mathfrak{R}$ if

$$\begin{aligned}&(\forall \iota \in \mathfrak{R})(\top_{\ddot{W}}(0) \geqslant \top_{\ddot{W}}(\iota)), \quad (\forall \iota \in \mathfrak{R})(\bot_{\ddot{W}}(0) \leqslant \bot_{\ddot{W}}(\iota)),\\ &(\forall \iota, \kappa \in \mathfrak{R})(\top_{\ddot{W}}(\kappa) \geqslant \min\{\top_{\ddot{W}}(\iota \star \kappa), \top_{\ddot{W}}(\iota)\}),\\ &(\forall \iota, \kappa \in \mathfrak{R})(\bot_{\ddot{W}}(\kappa) \leqslant \max\{\bot_{\ddot{W}}(\iota \star \kappa), \bot_{\ddot{W}}(\iota)\}),\end{aligned} \tag{1.3}$$

(4) a *Pythagorean fuzzy iBCCF* (PFiBCCF) of $\mathfrak{R}$ if (1.3) and

$$\begin{aligned}&(\forall \iota, \kappa, \sigma \in \mathfrak{R})(\top_{\ddot{W}}(\iota \star \sigma) \geqslant \min\{\top_{\ddot{W}}(\iota \star (\kappa \star \sigma)), \top_{\ddot{W}}(\iota \star \kappa)\}),\\ &(\forall \iota, \kappa, \sigma \in \mathfrak{R})(\bot_{\ddot{W}}(\iota \star \sigma) \leqslant \max\{\bot_{\ddot{W}}(\iota \star (\kappa \star \sigma)), \bot_{\ddot{W}}(\iota \star \kappa)\}),\end{aligned}$$

(5) a *Pythagorean fuzzy cBCCF* (PFcBCCF) of $\mathfrak{R}$ if (1.3) and

$$\begin{aligned}&(\forall \iota, \kappa, \sigma \in \mathfrak{R})(\top_{\ddot{W}}(\kappa) \geqslant \min\{\top_{\ddot{W}}(\iota \star ((\kappa \star \sigma) \star \kappa)), \top_{\ddot{W}}(\iota)\}),\\ &(\forall \iota, \kappa, \sigma \in \mathfrak{R})(\bot_{\ddot{W}}(\kappa) \leqslant \max\{\bot_{\ddot{W}}(\iota \star ((\kappa \star \sigma) \star \kappa)), \bot_{\ddot{W}}(\iota)\}),\end{aligned}$$

(6) a *Pythagorean fuzzy sBCCF* (PFsBCCF) of $\mathfrak{R}$ if (1.3) and

$$\begin{aligned}&(\forall \iota, \kappa, \sigma \in \mathfrak{R})(\top_{\ddot{W}}(((\sigma \star \kappa) \star \kappa) \star \sigma) \geqslant \min\{\top_{\ddot{W}}(\iota \star (\kappa \star \sigma)), \top_{\ddot{W}}(\iota)\}),\\ &(\forall \iota, \kappa, \sigma \in \mathfrak{R})(\bot_{\ddot{W}}(((\sigma \star \kappa) \star \kappa) \star \sigma) \leqslant \max\{\bot_{\ddot{W}}(\iota \star (\kappa \star \sigma)), \bot_{\ddot{W}}(\iota)\}),\end{aligned}$$

(7) a *Pythagorean fuzzy BCCI* (PFBCCI) of $\mathfrak{R}$ if (1.3) and

$$\begin{aligned}&(\forall \iota, \kappa, \sigma \in \mathfrak{R})(\top_{\ddot{W}}(\iota \star \sigma) \geqslant \min\{\top_{\ddot{W}}(\iota \star (\kappa \star \sigma)), \top_{\ddot{W}}(\kappa)\}),\\ &(\forall \iota, \kappa, \sigma \in \mathfrak{R})(\bot_{\ddot{W}}(\iota \star \sigma) \leqslant \max\{\bot_{\ddot{W}}(\iota \star (\kappa \star \sigma)), \bot_{\ddot{W}}(\kappa)\}),\end{aligned}$$

(8) a *Pythagorean fuzzy sBCCI* (PFsBCCI) of $\mathfrak{R}$ if (1.3) and

$$\begin{aligned}&(\forall \iota, \kappa, \sigma \in \mathfrak{R})(\top_{\ddot{W}}(\iota) \geqslant \min\{\top_{\ddot{W}}((\sigma \star \kappa) \star (\sigma \star \iota)), \top_{\ddot{W}}(\kappa)\}),\\ &(\forall \iota, \kappa, \sigma \in \mathfrak{R})(\bot_{\ddot{W}}(\iota) \leqslant \max\{\bot_{\ddot{W}}((\sigma \star \kappa) \star (\sigma \star \iota)), \bot_{\ddot{W}}(\kappa)\}).\end{aligned}$$

We get the diagram as follows.

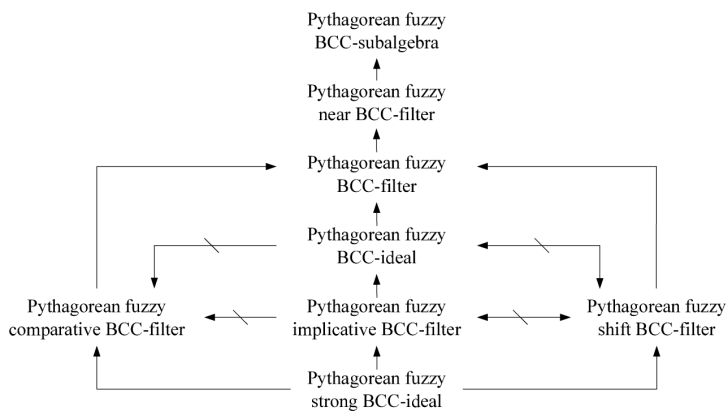

Figure 1: PFSs in BCC-algebras.

Definition 1.6 ([37]). Let $\dot{V}$ be a FS in $\mathfrak{R}$. For every $\pi \in [0, 1]$,

$$\begin{aligned}U(\top_{\dot{V}}, \pi) &= \{\iota \in \mathfrak{R} \mid \top_{\dot{V}}(\iota) \geqslant \pi\}, & U^{+}(\top_{\dot{V}}, \pi) &= \{\iota \in \mathfrak{R} \mid \top_{\dot{V}}(\iota) > \pi\},\\ L(\top_{\dot{V}}, \pi) &= \{\iota \in \mathfrak{R} \mid \top_{\dot{V}}(\iota) \leqslant \pi\}, & L^{-}(\top_{\dot{V}}, \pi) &= \{\iota \in \mathfrak{R} \mid \top_{\dot{V}}(\iota) < \pi\}.\end{aligned}$$

The following two theorems can be seen from [24].

Theorem 1.7. *$\ddot{W}$ is a PFiBCCF (resp., PFcBCCF, PFsBCCF) of $\mathfrak{R}$ if and only if $U(\top_{\ddot{W}}, \pi)$ and $L(\bot_{\ddot{W}}, \pi)$ are iBCCFs (resp., cBCCFs, sBCCFs) of $\mathfrak{R}$ for every $\pi \in [0,1]$ if they are nonempty.*

Theorem 1.8. *$\ddot{W}$ is a PFiBCCF (resp., PFcBCCF, PFsBCCF) of $\mathfrak{R}$ if and only if $U^{+}(\top_{\ddot{W}}, \pi)$ and $L^{-}(\bot_{\ddot{W}}, \pi)$ are iBCCFs (resp., cBCCFs, sBCCFs) of $\mathfrak{R}$ for every $\pi \in [0,1]$ if they are nonempty.*

Definition 1.9 ([41])**.** Let $\{\ddot{W}_\delta = (\top_{\ddot{W}_\delta}, \bot_{\ddot{W}_\delta})\}_{\delta\in\Delta}$ be a nonempty family of PFSs in a set $\mathfrak{R} \neq \emptyset$. $\top_{\bigwedge_{\delta\in\Delta}\ddot{W}_\delta}$ and $\bot_{\bigwedge_{\delta\in\Delta}\ddot{W}_\delta}$ of the *intersection* of $\ddot{W}_\delta$, denoted by $\bigwedge_{\delta\in\Delta}\ddot{W}_\delta$, are given below:

$$(\forall \iota \in \mathfrak{R})(\top_{\bigwedge_{\delta\in\Delta}\ddot{W}_\delta}(\iota) = \inf\{\top_{\ddot{W}_\delta}(\iota)\}_{\delta\in\Delta}), \quad (\forall \iota \in \mathfrak{R})(\bot_{\bigwedge_{\delta\in\Delta}\ddot{W}_\delta}(\iota) = \sup\{\bot_{\ddot{W}_\delta}(\iota)\}_{\delta\in\Delta}).$$

$\top_{\bigvee_{\delta\in\Delta}\ddot{W}_\delta}$ and $\bot_{\bigvee_{\delta\in\Delta}\ddot{W}_\delta}$ of the *union* of $\ddot{W}_\delta$, denoted by $\bigvee_{\delta\in\Delta}\ddot{W}_\delta$, are given below:

$$(\forall \iota \in \mathfrak{R})(\top_{\bigvee_{\delta\in\Delta}\ddot{W}_\delta}(\iota) = \sup\{\top_{\ddot{W}_\delta}(\iota)\}_{\delta\in\Delta}), \quad (\forall \iota \in \mathfrak{R})(\bot_{\bigvee_{\delta\in\Delta}\ddot{W}_\delta}(\iota) = \inf\{\bot_{\ddot{W}_\delta}(\iota)\}_{\delta\in\Delta}).$$

In particular, if $I = \{1, 2, \ldots, n\}$, the intersection of $\ddot{W}_1, \ddot{W}_2, \ldots, \ddot{W}_n$, denoted by $\ddot{W}_1 \wedge \ddot{W}_2 \wedge \ldots \wedge \ddot{W}_n$, is described by $\top_{\ddot{W}_1\wedge\ddot{W}_2\wedge\ldots\wedge\ddot{W}_n}$ and $\bot_{\ddot{W}_1\wedge\ddot{W}_2\wedge\ldots\wedge\ddot{W}_n}$ as follows:

$$(\forall \iota \in \mathfrak{R})(\top_{\ddot{W}_1\wedge\ddot{W}_2\wedge\ldots\wedge\ddot{W}_n}(\iota) = \min\{\top_{\ddot{W}_1}(\iota), \top_{\ddot{W}_2}(\iota), \ldots, \top_{\ddot{W}_n}(\iota)\}),$$
$$(\forall \iota \in \mathfrak{R})(\bot_{\ddot{W}_1\wedge\ddot{W}_2\wedge\ldots\wedge\ddot{W}_n}(\iota) = \max\{\bot_{\ddot{W}_1}(\iota), \bot_{\ddot{W}_2}(\iota), \ldots, \bot_{\ddot{W}_n}(\iota)\}).$$

The union of $\ddot{W}_1, \ddot{W}_2, \ldots, \ddot{W}_n$, denoted by $\ddot{W}_1 \vee \ddot{W}_2 \vee \ldots \vee \ddot{W}_n$, is described by $\top_{\ddot{W}_1\vee\ddot{W}_2\vee\ldots\vee\ddot{W}_n}$ and $\bot_{\ddot{W}_1\vee\ddot{W}_2\vee\ldots\vee\ddot{W}_n}$ as follows:

$$(\forall \iota \in \mathfrak{R})(\top_{\ddot{W}_1\vee\ddot{W}_2\vee\ldots\vee\ddot{W}_n}(\iota) = \max\{\top_{\ddot{W}_1}(\iota), \top_{\ddot{W}_2}(\iota), \ldots, \top_{\ddot{W}_n}(\iota)\}),$$
$$(\forall \iota \in \mathfrak{R})(\bot_{\ddot{W}_1\vee\ddot{W}_2\vee\ldots\vee\ddot{W}_n}(\iota) = \min\{\bot_{\ddot{W}_1}(\iota), \bot_{\ddot{W}_2}(\iota), \ldots, \bot_{\ddot{W}_n}(\iota)\}).$$

Theorems 1.10, 1.12, and 1.14 can be proven straightforward.

Theorem 1.10. *The intersection of any nonempty family of PFiBCCFs of a BCC-algebra $\mathfrak{R} = (\mathfrak{R}, \star, 0)$ is also a PFiBCCF.*

The example below demonstrates how the union of two PFiBCCFs may not be a PFiBCCF.

Example 1.11. Let $\mathfrak{R} = \{0, \nu, \kappa, \iota\}$ be a BCC-algebra with a binary operation $\star$ described by the subsequent table:

$\star$	0	ν	κ	ι
0	0	ν	κ	ι
ν	0	0	κ	κ
κ	0	ν	0	ν
ι	0	0	0	0

We define two PFSs $\ddot{W}_1 = (\top_{\ddot{W}_1}, \bot_{\ddot{W}_1})$ and $\ddot{W}_2 = (\top_{\ddot{W}_2}, \bot_{\ddot{W}_2})$ as follows:

$\mathfrak{R}$	0	ν	κ	ι
$\top_{\ddot{W}_1}$	0.8	0.8	0.1	0.1
$\bot_{\ddot{W}_1}$	0.2	0.2	0.3	0.3
$\top_{\ddot{W}_2}$	0.7	0.2	0.3	0.2
$\bot_{\ddot{W}_2}$	0.1	0.4	0.3	0.4

Then $\ddot{W}_1$ and $\ddot{W}_2$ are PFiBCCFs of $\mathfrak{R}$. Since

$$\begin{aligned}\top_{\ddot{W}_1\vee\ddot{W}_2}(0\star\iota)=\top_{\ddot{W}_1\vee\ddot{W}_2}(\iota)=0.2\ngeq 0.3&=\min\{0.3,0.8\}\\&=\min\{\top_{\ddot{W}_1\vee\ddot{W}_2}(\kappa),\top_{\ddot{W}_1\vee\ddot{W}_2}(\nu)\}\\&=\min\{\top_{\ddot{W}_1\vee\ddot{W}_2}(0\star(\nu\star\iota)),\top_{\ddot{W}_1\vee\ddot{W}_2}(0\star\nu)\},\end{aligned}$$

we have $\ddot{W}_1\vee\ddot{W}_2$ is not a PFiBCCF of $\mathfrak{R}$.

Theorem 1.12. *The intersection of any nonempty family of PFcBCCFs of a BCC-algebra $\mathfrak{R}=(\mathfrak{R},\star,0)$ is also a PFcBCCF.*

The example below demonstrates how the union of two PFcBCCFs may not be a PFcBCCF.

Example 1.13. According to Example 1.11, $\ddot{W}_1$ and $\ddot{W}_2$ are PFcBCCFs of $\mathfrak{R}$. Since

$$\begin{aligned}\top_{\ddot{W}_1\vee\ddot{W}_2}(\iota)=0.2\ngeq 0.3=\min\{0.3,0.8\}&=\min\{\top_{\ddot{W}_1\vee\ddot{W}_2}(\kappa),\top_{\ddot{W}_2\vee\ddot{W}_2}(\nu)\}\\&=\min\{\top_{\ddot{W}_1\vee\ddot{W}_2}(\nu\star((\iota\star 0)\star\iota)),\top_{\ddot{W}_1\vee\ddot{W}_2}(\nu)\},\end{aligned}$$

we have $\ddot{W}_1\vee\ddot{W}_2$ is not a PFcBCCF of $\mathfrak{R}$.

Theorem 1.14. *The intersection of any nonempty family of PFsBCCFs of a BCC-algebra $\mathfrak{R}=(\mathfrak{R},\star,0)$ is also a PFsBCCF.*

The example below demonstrates how the union of two PFsBCCFs may not be a PFsBCCF.

Example 1.15. According to Example 1.11, $\ddot{W}_1$ and $\ddot{W}_2$ are PFsBCCFs of $\mathfrak{R}$. Since

$$\begin{aligned}\top_{\ddot{W}_1\vee\ddot{W}_2}(((\iota\star 0)\star 0)\star\iota)=\top_{\ddot{W}_1\vee\ddot{W}_2}(\iota)=0.2\ngeq 0.3=\min\{0.8,0.3\}&=\min\{\top_{\ddot{W}_1\vee\ddot{W}_2}(\nu),\top_{\ddot{W}_1\vee\ddot{W}_2}(\kappa)\}\\&=\min\{\top_{\ddot{W}_1\vee\ddot{W}_2}(\kappa\star(0\star\iota)),\top_{\ddot{W}_1\vee\ddot{W}_2}(\kappa)\},\end{aligned}$$

we have $\ddot{W}_1\vee\ddot{W}_2$ is not a PFsBCCF of $\mathfrak{R}$.

2. PFSSs over BCC-algebras

From now on, we shall let E be a set of parameters. Let $PF(\mathfrak{R})$ be the set of all PFSs in $\mathfrak{R}$. A subset A of E is called a set of statistics.

Definition 2.1 ([20]). A pair (F,E) is called a *soft set* (over $\mathfrak{R}$) if F is a mapping of E into the set of all subsets of $\mathfrak{R}$.

Definition 2.2 ([33]). Let $A\subseteq E$. A pair $(\widetilde{\ddot{W}},A)$ is called a *Pythagorean fuzzy soft set* (PFSS) over $\mathfrak{R}$ if $\widetilde{\ddot{W}}$ is a mapping given by $\widetilde{\ddot{W}}\colon A\to PF(\mathfrak{R})$, that is, a PFSS is a statistic family of PFSs in $\mathfrak{R}$. In general, for every $\nu\in A$, $\widetilde{\ddot{W}}[\nu]:=\{(\iota,\top_{\widetilde{\ddot{W}}[\nu]}(\iota),\bot_{\widetilde{\ddot{W}}[\nu]}(\iota))\mid\iota\in\mathfrak{R}\}$ is a PFS in $\mathfrak{R}$ and it is called a *Pythagorean fuzzy value set* of statistic ν.

We call a PFSS $(\widetilde{\ddot{W}},A)$ over $\mathfrak{R}$ that is a *constant PFSS* (CPFSS) based on the element $\nu\in A$ (we refer to as an ν-*constant PFSS* (ν-CPFSS)) of $\mathfrak{R}$ if a PFS $\widetilde{\ddot{W}}[\nu]$ in $\mathfrak{R}$ is a CPFS. If $(\widetilde{\ddot{W}},A)$ is an ν-CPFSS of $\mathfrak{R}$ for each $\nu\in A$, we say that $(\widetilde{\ddot{W}},A)$ is a *CPFSS* of $\mathfrak{R}$.

Definition 2.3 ([33]). A PFSS $(\widetilde{\ddot{W}},A)$ over $\mathfrak{R}$ is called a *Pythagorean fuzzy soft BCCS* (PFSBCCS) based on the element $\nu\in A$ (we refer to as an ν-*Pythagorean fuzzy soft BCCS* (ν-PFSBCCS)) of $\mathfrak{R}$ if a PFS $\widetilde{\ddot{W}}[\nu]$ in $\mathfrak{R}$ is a PFBCCS. If $(\widetilde{\ddot{W}},A)$ is an ν-PFSBCCS of $\mathfrak{R}$ for each $\nu\in A$, we say that $(\widetilde{\ddot{W}},A)$ is a *PFSBCCS* of $\mathfrak{R}$.

Similarly, Pythagorean fuzzy soft NBCCF (PFSNBCCF), Pythagorean fuzzy soft BCCF (PFSBCCF), Pythagorean fuzzy soft BCCI (PFSBCCI), and Pythagorean fuzzy soft sBCCI (PFSsBCCI) are introduced by Definition 2.3.

Satirad et al. [33] proved that the concept of PFSBCCSs is a generalization of PFSNBCCFs, PFSNBCCFs is a generalization of PFSBCCFs, PFSBCCFs is a generalization of PFSBCCIs, and PFSBCCIs is a generalization of PFSsBCCIs, according to Satirad et al. [33]. Additionally, they demonstrated that in $\mathfrak{R}$, PFSsBCCIs and CPFSSs coincide.

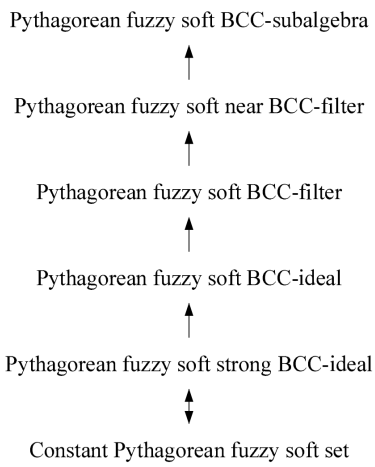

Figure 2: PFSSs over BCC-algebras.

Definition 2.4 ([21]). Let $A, B \subseteq E$ and $(\widetilde{\ddot{W}}, A), (\widetilde{Q}, B)$ be two PFSSs over $\mathfrak{R}$. If $(\widetilde{\ddot{W}}, A)$ and $(\widetilde{Q}, B)$ meet the following two requirements:

(1) $B \subseteq A$;

(2) $(\forall \vartheta \in B, \iota \in \mathfrak{R})(\top_{\widetilde{Q}[\vartheta]}(\iota) \leqslant \top_{\widetilde{\ddot{W}}[\vartheta]}(\iota), \perp_{\widetilde{Q}[\vartheta]}(\iota) \geqslant \perp_{\widetilde{\ddot{W}}[\vartheta]}(\iota))$,

then we call $(\widetilde{Q}, B)$ the Pythagorean fuzzy soft subset of $(\widetilde{\ddot{W}}, A)$, denoted by $(\widetilde{Q}, B)\widetilde{\subseteq}(\widetilde{\ddot{W}}, A)$.

Definition 2.5 ([21]). Let $A, B \subseteq E$ and $(\widetilde{\ddot{W}}, A), (\widetilde{Q}, B)$ be two PFSSs over $\mathfrak{R}$. If $(\widetilde{Q}, B)\widetilde{\subseteq}(\widetilde{\ddot{W}}, A)$ and $(\widetilde{\ddot{W}}, A)\widetilde{\subseteq}(\widetilde{Q}, B)$, then we call $(\widetilde{\ddot{W}}, A)$ *equal* $(\widetilde{Q}, B)$, denoted by $(\widetilde{Q}, B)\widetilde{=}(\widetilde{\ddot{W}}, A)$, meaning, $A = B$ and $\widetilde{\ddot{W}}[\nu] = \widetilde{Q}[\nu]$ for each $\nu \in A$.

Definition 2.6 ([21]). Let $(\widetilde{\ddot{W}}_1, A_1)$ and $(\widetilde{\ddot{W}}_2, A_2)$ be two PFSSs over $\mathfrak{R}$. The *union* of $(\widetilde{\ddot{W}}_1, A_1)$ and $(\widetilde{\ddot{W}}_2, A_2)$ is defined to be the PFSS $(\widetilde{\ddot{W}}_1, A_1)\widetilde{\cup}(\widetilde{\ddot{W}}_2, A_2) = (\widetilde{\ddot{W}}, A)$ fulfilling the necessary prerequisites:

(i) $A = A_1 \cup A_2$ and

(ii) for each $\nu \in A$,

$$\widetilde{\ddot{W}}[\nu] = \begin{cases} \widetilde{\ddot{W}}_1[\nu], & \text{if } \nu \in A_1 \setminus A_2, \\ \widetilde{\ddot{W}}_2[\nu], & \text{if } \nu \in A_2 \setminus A_1, \\ \widetilde{\ddot{W}}_1[\nu] \vee \widetilde{\ddot{W}}_2[\nu], & \text{if } \nu \in A_1 \cap A_2. \end{cases}$$

The *restricted union* [33] of $(\widetilde{\ddot{W}}_1, A_1)$ and $(\widetilde{\ddot{W}}_2, A_2)$ is defined to be the PFSS $(\widetilde{\ddot{W}}_1, A_1)\widetilde{\Cup}(\widetilde{\ddot{W}}_2, A_2) = (\widetilde{\ddot{W}}, A)$ fulfilling the necessary prerequisites:

(i) $A = A_1 \cap A_2 \neq \emptyset$ and

(ii) $\widetilde{\ddot{W}}[\nu] = \widetilde{\ddot{W}}_1[\nu] \vee \widetilde{\ddot{W}}_2[\nu]$ for each $\nu \in A$.

Definition 2.7 ([33]). Let $(\widetilde{\ddot{W}}_1, A_1)$ and $(\widetilde{\ddot{W}}_2, A_2)$ be two PFSSs over $\mathfrak{R}$. The *extended intersection* of $(\widetilde{\ddot{W}}_1, A_1)$ and $(\widetilde{\ddot{W}}_2, A_2)$ is defined to be the PFSS $(\widetilde{\ddot{W}}_1, A_1)\widetilde{\cap}(\widetilde{\ddot{W}}_2, A_2) = (\widetilde{\ddot{W}}, A)$ fulfilling the necessary prerequisites:

(i) $A = A_1 \cup A_2$ and

(ii) for each $\nu \in A$,

$$\widetilde{\ddot{W}}[\nu] = \begin{cases} \widetilde{\ddot{W}}_1[\nu], & \text{if } \nu \in A_1 \setminus A_2, \\ \widetilde{\ddot{W}}_2[\nu], & \text{if } \nu \in A_2 \setminus A_1, \\ \widetilde{\ddot{W}}_1[\nu] \wedge \widetilde{\ddot{W}}_2[\nu], & \text{if } \nu \in A_1 \cap A_2. \end{cases}$$

The *intersection* [21] of $(\widetilde{\ddot{W}}_1, A_1)$ and $(\widetilde{\ddot{W}}_2, A_2)$ is defined to be the fuzzy soft set $(\widetilde{\ddot{W}}_1, A_1)\widetilde{\Cap}(\widetilde{\ddot{W}}_2, A_2) = (\widetilde{\ddot{W}}, A)$ fulfilling the necessary prerequisites:

(i) $A = A_1 \cap A_2 \neq \emptyset$ and

(ii) $\widetilde{\ddot{W}}[\nu] = \widetilde{\ddot{W}}_1[\nu] \wedge \widetilde{\ddot{W}}_2[\nu]$ for each $\nu \in A$.

2.1. Generalizations

Definition 2.8. A PFSS $(\widetilde{\ddot{W}}, A)$ over $\mathfrak{R}$ is called a *Pythagorean fuzzy soft iBCCF* (PFSiBCCF) based on the element $\nu \in A$ (we refer to as an ν-*Pythagorean fuzzy soft iBCCF* (ν-PFSiBCCF)) of $\mathfrak{R}$ if a PFS $\widetilde{\ddot{W}}[\nu]$ in $\mathfrak{R}$ is a PFiBCCF. If $(\widetilde{\ddot{W}}, A)$ is an ν-PFSiBCCF of $\mathfrak{R}$ for each $\nu \in A$, we state that $(\widetilde{\ddot{W}}, A)$ is a *PFSiBCCF* of $\mathfrak{R}$.

Definition 2.9. A PFSS $(\widetilde{\ddot{W}}, A)$ over $\mathfrak{R}$ is called a *Pythagorean fuzzy soft cBCCF* (PFScBCCF) based on $\nu \in A$ (we refer to as an ν-*Pythagorean fuzzy soft cBCCF* (ν-PFScBCCF)) of $\mathfrak{R}$ if a PFS $\widetilde{\ddot{W}}[\nu]$ in $\mathfrak{R}$ is a PFcBCCF. If $(\widetilde{\ddot{W}}, A)$ is an ν-PFScBCCF of $\mathfrak{R}$ for each $\nu \in A$, we state that $(\widetilde{\ddot{W}}, A)$ is a *PFScBCCF* of $\mathfrak{R}$.

Definition 2.10. A PFSS $(\widetilde{\ddot{W}}, A)$ over $\mathfrak{R}$ is called a *Pythagorean fuzzy soft sBCCF* (PFSsBCCF) based on $\nu \in A$ (we refer to as an ν-*Pythagorean fuzzy soft sBCCF* (ν-PFSsBCCF)) of $\mathfrak{R}$ if a PFS $\widetilde{\ddot{W}}[\nu]$ in $\mathfrak{R}$ is a PFsBCCF. If $(\widetilde{\ddot{W}}, A)$ is an ν-PFSsBCCF of $\mathfrak{R}$ for each $\nu \in A$, we state that $(\widetilde{\ddot{W}}, A)$ is a *PFSsBCCF* of $\mathfrak{R}$.

It is simple to verify the proof of the ensuing theorem.

Theorem 2.11. *If $(\widetilde{\ddot{W}}, A)$ is a PFSiBCCF (resp., PFScBCCF, PFSsBCCF) of $\mathfrak{R}$ and $\emptyset \neq B \subseteq A$, then $(\widetilde{\ddot{W}}|_B, B)$ is a PFSiBCCF (resp., PFScBCCF, PFSsBCCF) of $\mathfrak{R}$.*

We may derive the following theorems from Figure 1.

Theorem 2.12. *Every ν-PFSiBCCF of $\mathfrak{R}$ is an ν-PFSBCCF. Moreover, every PFSiBCCF of $\mathfrak{R}$ is a PFSBCCF.*

Theorem 2.13. *Every ν-PFScBCCF of $\mathfrak{R}$ is an ν-PFSBCCF. Moreover, every PFScBCCF of $\mathfrak{R}$ is a PFSBCCF.*

Theorem 2.14. *Every ν-PFSsBCCF of $\mathfrak{R}$ is an ν-PFSBCCF. Moreover, every PFSsBCCF of $\mathfrak{R}$ is a PFSBCCF.*

Theorems 2.12, 2.13, and 2.14's converse is false, as demonstrated by the case below.

Example 2.15. Let $\mathfrak{R}$ be a set of 5 countries, that is, $\mathfrak{R} = \{\text{Australia, Korea, Japan, Dubai, Singapore}\}$. Define a binary operation $\star$ on $\mathfrak{R}$ as the following table:

$\star$	Australia	Dubai	Japan	Korea	Singapore
Australia	Australia	Dubai	Japan	Korea	Singapore
Dubai	Australia	Australia	Japan	Korea	Singapore
Japan	Australia	Australia	Australia	Korea	Singapore
Korea	Australia	Australia	Dubai	Australia	Singapore
Singapore	Australia	Australia	Australia	Australia	Australia

Then $\mathfrak{R} = (\mathfrak{R}, \star, \text{Australia})$ is a BCC-algebra. Let $A = \{\text{Employee, Chef, Musician}\}$ be a set of 3 occupations of Thai people that live in $\mathfrak{R}$ and $(\widetilde{\ddot{W}}, A)$ a PFSS over $\mathfrak{R}$. Then $\widetilde{\ddot{W}}[\text{Employee}], \widetilde{\ddot{W}}[\text{Chef}]$, and $\widetilde{\ddot{W}}[\text{Musician}]$ are PFSs in $\mathfrak{R}$ defined as follows:

$\widetilde{\ddot{W}}$	Australia	Dubai	Japan	Korea	Singapore
Employee	$(1, 0)$	$(0.5, 0.3)$	$(0.2, 0.7)$	$(0.1, 0.8)$	$(0, 0.9)$
Chef	$(0.9, 0.4)$	$(0.6, 0.6)$	$(0.3, 0.7)$	$(0.1, 0.8)$	$(0.1, 0.9)$
Musician	$(0.8, 0.2)$	$(0.4, 0.3)$	$(0.3, 0.4)$	$(0.2, 0.8)$	$(0.1, 0.9)$

Then $(\widetilde{\ddot{W}}, A)$ is a PFSBCCF of $\mathfrak{R}$. But $(\widetilde{\ddot{W}}, A)$ is not a PFSiBCCF of $\mathfrak{R}$ because $(\widetilde{\ddot{W}}, A)$ is not an Employee-PFSiBCCF, a Chef-PFSiBCCF, and a Musician-PFSiBCCF of $\mathfrak{R}$ such as

$$\begin{aligned}
\top_{\widetilde{\ddot{W}}[\text{Chef}]}(\text{Korea} \star \text{Japan}) &= \top_{\widetilde{\ddot{W}}[\text{Chef}]}(\text{Dubai}) \\
&= 0.6 \\
&\ngeq 0.9 \\
&= \min\{0.9, 0.9\} \\
&= \min\{\top_{\widetilde{\ddot{W}}[\text{Chef}]}(\text{Australia}), \top_{\widetilde{\ddot{W}}[\text{Chef}]}(\text{Australia})\} \\
&= \min\{\top_{\widetilde{\ddot{W}}[\text{Chef}]}(\text{Korea} \star (\text{Korea} \star \text{Japan})), \top_{\widetilde{\ddot{W}}[\text{Chef}]}(\text{Korea} \star \text{Korea})\}.
\end{aligned}$$

Hence, $\widetilde{\ddot{W}}[\text{Chef}]$ is not a PFiBCCF of $\mathfrak{R}$, that is, $(\widetilde{\ddot{W}}, A)$ is not a PFSiBCCF of $\mathfrak{R}$.

Example 2.16. According to Example 2.15, $(\widetilde{\ddot{W}}, A)$ is a PFSBCCF of $\mathfrak{R}$. But $(\widetilde{\ddot{W}}, A)$ is not a PFScBCCF of $\mathfrak{R}$ because $(\widetilde{\ddot{W}}, A)$ is not an Employee-PFScBCCF, a Chef-PFScBCCF, and a Musician-PFScBCCF of $\mathfrak{R}$ such as

$$\begin{aligned}
\perp_{\widetilde{\ddot{W}}[\text{Employee}]}(\text{Japan}) &= 0.7 \\
&\nleq 0.3 \\
&= \max\{0, 0.3\} \\
&= \max\{\perp_{\widetilde{\ddot{W}}[\text{Employee}]}(\text{Australia}), \perp_{\widetilde{\ddot{W}}[\text{Employee}]}(\text{Dubai})\} \\
&= \max\{\perp_{\widetilde{\ddot{W}}[\text{Employee}]}(\text{Dubai} \star ((\text{Japan} \star \text{Korea}) \star \text{Japan})), \perp_{\widetilde{\ddot{W}}[\text{Employee}]}(\text{Dubai})\}.
\end{aligned}$$

Hence, $\widetilde{\ddot{W}}[\text{Employee}]$ is not a PFcBCCF of $\mathfrak{R}$, that is, $(\widetilde{\ddot{W}}, A)$ is not a PFScBCCF of $\mathfrak{R}$.

Example 2.17. According to Example 2.15, $(\widetilde{\ddot{W}}, A)$ is a PFSBCCF of $\mathfrak{R}$. But $(\widetilde{\ddot{W}}, A)$ is not a PFSsBCCF of $\mathfrak{R}$ because $(\widetilde{\ddot{W}}, A)$ is not an Employee-PFSsBCCF, a Chef-PFSsBCCF, and a Musician-PFSsBCCF of $\mathfrak{R}$ such as

$$\top_{\widetilde{\ddot{W}}[\text{Musician}]}(((\text{Japan} \star \text{Korea}) \star \text{Korea}) \star \text{Japan})$$

$$
\begin{aligned}
&= \top_{\widetilde{\ddot{W}}[\text{Musician}]}(\text{Japan}) \\
&= 0.3 \\
&\ngeq 0.4 \\
&= \min\{0.4, 0.8\} \\
&= \min\{\top_{\widetilde{\ddot{W}}[\text{Musician}]}(\text{Dubai}), \top_{\widetilde{\ddot{W}}[\text{Musician}]}(\text{Australia})\} \\
&= \min\{\top_{\widetilde{\ddot{W}}[\text{Musician}]}(\text{Australia} \star (\text{Korea} \star \text{Japan})), \top_{\widetilde{\ddot{W}}[\text{Musician}]}(\text{Australia})\}.
\end{aligned}
$$

Hence, $\widetilde{\ddot{W}}[\text{Musician}]$ is not a PFsBCCF of $\mathfrak{R}$, that is, $(\widetilde{\ddot{W}}, A)$ is not a PFSsBCCF of $\mathfrak{R}$.

Theorem 2.18. *Every ν-PFSiBCCF of $\mathfrak{R}$ is an ν-PFSBCCI. Moreover, every PFSiBCCF of $\mathfrak{R}$ is a PFSBCCI.*

Theorem 2.18's converse is false, as demonstrated by the case below.

Example 2.19. According to Example 2.15, $(\widetilde{\ddot{W}}, A)$ is a PFSBCCI of $\mathfrak{R}$. But $(\widetilde{\ddot{W}}, A)$ is not a PFSiBCCF of $\mathfrak{R}$ because $(\widetilde{\ddot{W}}, A)$ is not an Employee-PFSiBCCF, a Chef-PFSiBCCF, and a Musician-PFSiBCCF of $\mathfrak{R}$ such as

$$
\begin{aligned}
\perp_{\widetilde{\ddot{W}}[\text{Musician}]}(\text{Korea} \star \text{Japan}) &= \perp_{\widetilde{\ddot{W}}[\text{Musician}]}(\text{Dubai}) \\
&= 0.3 \\
&\nleq 0.2 \\
&= \max\{0.2, 0.2\} \\
&= \max\{\perp_{\widetilde{\ddot{W}}[\text{Musician}]}(\text{Australia}), \perp_{\widetilde{\ddot{W}}[\text{Musician}]}(\text{Australia})\} \\
&= \max\{\perp_{\widetilde{\ddot{W}}[\text{Musician}]}(\text{Korea} \star (\text{Korea} \star \text{Japan})), \perp_{\widetilde{\ddot{W}}[\text{Musician}]}(\text{Korea} \star \text{Korea})\}.
\end{aligned}
$$

Hence, $\widetilde{\ddot{W}}[\text{Musician}]$ is not a PFiBCCF of $\mathfrak{R}$, that is, $(\widetilde{\ddot{W}}, A)$ is not a PFSiBCCF of $\mathfrak{R}$.

Theorem 2.20. *Every ν-PFSsBCCI of $\mathfrak{R}$ is an ν-PFSiBCCF (resp., ν-PFScBCCF, ν-PFSsBCCF). Moreover, every PFSsBCCI of $\mathfrak{R}$ is a PFSiBCCF (resp., PFScBCCF, PFSsBCCF).*

Theorem 2.20's converse is false, as demonstrated by the case below.

Example 2.21. Let $\mathfrak{R}$ be a set of 5 internet stocks, that is, $\mathfrak{R} = \{\iota_1, \iota_2, \iota_3, \iota_4, \iota_5\}$. Define a binary operation $\star$ on $\mathfrak{R}$ as the following table:

$\star$	ι_1	ι_2	ι_3	ι_4	ι_5
ι_1	ι_1	ι_2	ι_3	ι_4	ι_5
ι_2	ι_1	ι_1	ι_2	ι_3	ι_5
ι_3	ι_1	ι_1	ι_1	ι_3	ι_5
ι_4	ι_1	ι_1	ι_1	ι_1	ι_5
ι_5	ι_1	ι_1	ι_1	ι_3	ι_1

Then $\mathfrak{R} = (\mathfrak{R}, \star, \iota_1)$ is a BCC-algebra. Let $A = \{$Market trend, Annual performance, Circulation market value$\}$ be a set of 3 evaluations in $\mathfrak{R}$ and $(\widetilde{\ddot{W}}, A)$ a PFSS over $\mathfrak{R}$. Then $\widetilde{\ddot{W}}[\text{Market trend}]$, $\widetilde{\ddot{W}}[\text{Annual performance}]$, and $\widetilde{\ddot{W}}[\text{Circulation market value}]$ are PFSs in $\mathfrak{R}$ defined as follows:

$\widetilde{\ddot{W}}$	ι_1	ι_2	ι_3	ι_4	ι_5
Market trend	$(0.8, 0.2)$	$(0.8, 0.2)$	$(0.8, 0.2)$	$(0.8, 0.2)$	$(0.4, 0.7)$
Annual performance	$(0.5, 0.3)$	$(0.5, 0.3)$	$(0.5, 0.3)$	$(0.5, 0.3)$	$(0.5, 0.3)$
Circulation market value	$(0.7, 0.3)$	$(0.7, 0.3)$	$(0.7, 0.3)$	$(0.7, 0.3)$	$(0.2, 0.9)$

Then $(\widetilde{\ddot{W}}, A)$ is a PFSiBCCF (PFScBCCF,PFSsBCCF) of $\mathfrak{R}$. But $(\widetilde{\ddot{W}}, A)$ is not a PFSsBCCI of $\mathfrak{R}$ because $(\widetilde{\ddot{W}}, A)$ is not a Market trend-CPFSS (Circulation market value-CPFSS) of $\mathfrak{R}$. Hence, $\widetilde{\ddot{W}}$[Market trend] and $\widetilde{\ddot{W}}$[Circulation market value] are not a PFSBCCI of $\mathfrak{R}$, that is, $(\widetilde{\ddot{W}}, A)$ is not a PFSsBCCI of $\mathfrak{R}$.

Next, we shall find examples for study generalization of new notions of PFSSs and original PFSSs over BCC-algebras.

Example 2.22. According to Example 2.15, $(\widetilde{\ddot{W}}, A)$ is a PFSBCCI of $\mathfrak{R}$. But $(\widetilde{\ddot{W}}, A)$ is not a PFScBCCF of $\mathfrak{R}$ because $(\widetilde{\ddot{W}}, A)$ is not an Employee-PFScBCCF, a Chef-PFScBCCF, and a Musician-PFScBCCF of $\mathfrak{R}$ such as

$$\begin{aligned}
\top_{\widetilde{\ddot{W}}[\text{Chef}]}(\text{Korea}) = 0.1 &\ngeq 0.3 \\
&= \min\{0.9, 0.3\} \\
&= \min\{\top_{\widetilde{\ddot{W}}[\text{Chef}]}(\text{Australia}), \top_{\widetilde{\ddot{W}}[\text{Chef}]}(\text{Japan})\} \\
&= \min\{\top_{\widetilde{\ddot{W}}[\text{Chef}]}(\text{Japan} \star ((\text{Korea} \star \text{Singapore}) \star \text{Korea})), \top_{\widetilde{\ddot{W}}[\text{Chef}]}(\text{Japan})\}.
\end{aligned}$$

Hence, $\widetilde{\ddot{W}}$[Chef] is not a PFcBCCF of $\mathfrak{R}$, that is, $(\widetilde{\ddot{W}}, A)$ is not a PFScBCCF of $\mathfrak{R}$.

Example 2.23. According to Example 2.15, $(\widetilde{\ddot{W}}, A)$ is a PFSBCCI of $\mathfrak{R}$. But $(\widetilde{\ddot{W}}, A)$ is not a PFSsBCCF of $\mathfrak{R}$ because $(\widetilde{\ddot{W}}, A)$ is not an Employee-PFSsBCCF, a Chef-PFSsBCCF, and a Musician-PFSsBCCF of $\mathfrak{R}$ such as

$$\begin{aligned}
&\perp_{\widetilde{\ddot{W}}[\text{Employee}]}(((\text{Korea} \star \text{Singapore}) \star \text{Singapore}) \star \text{Korea}) \\
&\quad = \perp_{\widetilde{\ddot{W}}[\text{Employee}]}(\text{Korea}) \\
&\quad = 0.8 \\
&\quad \nleq 0.7 \\
&\quad = \max\{0, 0.7\} \\
&\quad = \max\{\perp_{\widetilde{\ddot{W}}[\text{Employee}]}(\text{Dubai}), \perp_{\widetilde{\ddot{W}}[\text{Employee}]}(\text{Japan})\} \\
&\quad = \max\{\perp_{\widetilde{\ddot{W}}[\text{Employee}]}(\text{Japan} \star (\text{Singapore} \star \text{Korea})), \perp_{\widetilde{\ddot{W}}[\text{Employee}]}(\text{Japan})\}.
\end{aligned}$$

Hence, $\widetilde{\ddot{W}}$[Employee] is not a PFsBCCF of $\mathfrak{R}$, that is, $(\widetilde{\ddot{W}}, A)$ is not a PFSsBCCF of $\mathfrak{R}$.

Example 2.24. Let $\mathfrak{R}$ be a set of 4 cars, that is, $\mathfrak{R} = \{c_1, c_2, c_3, c_4\}$. Define a binary operation $\star$ on $\mathfrak{R}$ as the following table:

$\star$	c_1	c_2	c_3	c_4
c_1	c_1	c_2	c_3	c_4
c_2	c_1	c_1	c_3	c_3
c_3	c_1	c_1	c_1	c_3
c_4	c_1	c_1	c_1	c_1

Then $\mathfrak{R} = (\mathfrak{R}, \star, c_1$ is a BCC-algebra. Let $A = \{$Price, Modernity, Engine torque$\}$ be a set of purchasing decisions in $\mathfrak{R}$ and $(\widetilde{\ddot{W}}, A)$ a PFSS over $\mathfrak{R}$. Then $\widetilde{\ddot{W}}$[Price], $\widetilde{\ddot{W}}$[Modernity], and $\widetilde{\ddot{W}}$[Engine torque] are PFSs in $\mathfrak{R}$ defined as follows:

$\widetilde{\ddot{W}}$	c_1	c_2	c_3	c_4
Price	$(0.7, 0.5)$	$(0.7, 0.5)$	$(0.3, 0.6)$	$(0.3, 0.6)$
Modernity	$(0.9, 0.4)$	$(0.9, 0.4)$	$(0.1, 0.8)$	$(0.1, 0.8)$
Engine torque	$(0.8, 0.3)$	$(0.8, 0.3)$	$(0.2, 0.4)$	$(0.2, 0.4))$

Then $(\widetilde{\ddot{W}}, A)$ is a PFSsBCCF of $\mathfrak{R}$. But $(\widetilde{\ddot{W}}, A)$ is not a PFSiBCCF of $\mathfrak{R}$ because $(\widetilde{\ddot{W}}, A)$ is not a Price-PFSiBCCF, a Modernity-PFSiBCCF, and an Engine torque-PFSiBCCF of $\mathfrak{R}$ such as

$$\begin{aligned}\top_{\widetilde{\ddot{W}}[\text{Price}]}(c_3 \star c_4) = \top_{\widetilde{\ddot{W}}[\text{Price}]}(c_3) = 0.3 \ngeq 0.7 &= \min\{0.7, 0.7\} \\ &= \min\{\top_{\widetilde{\ddot{W}}[\text{Price}]}(c_1), \top_{\widetilde{\ddot{W}}[\text{Price}]}(c_1)\} \\ &= \min\{\top_{\widetilde{\ddot{W}}[\text{Price}]}(c_3 \star (c_3 \star c_4)), \top_{\widetilde{\ddot{W}}[\text{Price}]}(c_3 \star c_3)\}.\end{aligned}$$

Hence, $\widetilde{\ddot{W}}[\text{Price}]$ is not a PFiBCCF of $\mathfrak{R}$, that is, $(\widetilde{\ddot{W}}, A)$ is not a PFSiBCCF of $\mathfrak{R}$.

Example 2.25. According to Example 2.24, $(\widetilde{\ddot{W}}, A)$ is a PFSsBCCF of $\mathfrak{R}$. But $(\widetilde{\ddot{W}}, A)$ is not a PFScBCCF of $\mathfrak{R}$ because $(\widetilde{\ddot{W}}, A)$ is not a Price-PFScBCCF, a Modernity-PFScBCCF, and an Engine torque-PFScBCCF of $\mathfrak{R}$ such as

$$\begin{aligned}\perp_{\widetilde{\ddot{W}}[\text{Modernity}]}(c_3) = 0.8 \nleq 0.4 = \max\{0.4, 0.4\} &= \max\{\perp_{\widetilde{\ddot{W}}[\text{Modernity}]}(c_1), \perp_{\widetilde{\ddot{W}}[\text{Modernity}]}(c_1)\} \\ &= \max\{\perp_{\widetilde{\ddot{W}}[\text{Modernity}]}(c_1 \star ((c_3 \star c_4) \star c_3)), \perp_{\widetilde{\ddot{W}}[\text{Modernity}]}(c_1)\}.\end{aligned}$$

Hence, $\widetilde{\ddot{W}}[\text{Modernity}]$ is not a PFcBCCF of $\mathfrak{R}$, that is, $(\widetilde{\ddot{W}}, A)$ is not a PFScBCCF of $\mathfrak{R}$.

Example 2.26. According to Example 2.24, $(\widetilde{\ddot{W}}, A)$ is a PFSsBCCF of $\mathfrak{R}$. But $(\widetilde{\ddot{W}}, A)$ is not a PFSBCCI of $\mathfrak{R}$ because $(\widetilde{\ddot{W}}, A)$ is not a Price-PFSBCCI, a Modernity-PFSBCCI, and an Engine torque-PFSBCCI of $\mathfrak{R}$ such as

$$\begin{aligned}\top_{\widetilde{\ddot{W}}[\text{Engine torque}]}(c_3 \star c_4) = \top_{\widetilde{\ddot{W}}[\text{Engine torque}]}(c_3) &= 0.2 \\ \ngeq 0.8 &= \min\{0.8, 0.8\} \\ &= \min\{\top_{\widetilde{\ddot{W}}[\text{Engine torque}]}(c_1), \top_{\widetilde{\ddot{W}}[\text{Engine torque}]}(c_2)\} \\ &= \min\{\top_{\widetilde{\ddot{W}}[\text{Engine torque}]}(c_3 \star (c_2 \star c_4)), \top_{\widetilde{\ddot{W}}[\text{Engine torque}]}(c_2)\}.\end{aligned}$$

Hence, $\widetilde{\ddot{W}}[\text{Engine torque}]$ is not a PFBCCI of $\mathfrak{R}$, that is, $(\widetilde{\ddot{W}}, A)$ is not a PFSBCCI of $\mathfrak{R}$.

Example 2.27. Let $\mathfrak{R}$ be a set of 5 cities in Thailand, that is, $\mathfrak{R}$ = {Bangkok, Chiang Mai, Chiang Rai, Phuket, Khon Kaen}. Define a binary operation $\star$ on $\mathfrak{R}$ as the following table:

$\star$	Bangkok	Chiang Mai	Chiang Rai	Phuket	Khon Kaen
Bangkok	Bangkok	Chiang Mai	Chiang Rai	Phuket	Khon Kaen
Chiang Mai	Bangkok	Bangkok	Bangkok	Bangkok	Khon Kaen
Chiang Rai	Bangkok	Chiang Mai	Bangkok	Bangkok	Khon Kaen
Phuket	Bangkok	Chiang Mai	Chiang Rai	Bangkok	Khon Kaen
Khon Kaen	Bangkok	Chiang Mai	Chiang Rai	Phuket	Bangkok

Then $\mathfrak{R} = (\mathfrak{R}, \star, \text{Bangkok})$ is a BCC-algebra. Let A = {Crowed, Cost of living} be a set of 2 factors in $\mathfrak{R}$ and $(\widetilde{\ddot{W}}, A)$ a PFSS over $\mathfrak{R}$. Then $\widetilde{\ddot{W}}[\text{Crowed}]$ and a $\widetilde{\ddot{W}}[\text{Cost of living}]$ are PFSs in $\mathfrak{R}$ defined as follows:

$\widetilde{\ddot{W}}$	Bangkok	Chiang Mai	Chiang Rai	Phuket	Khon Kaen
Crowed	$(0.7, 0.1)$	$(0.2, 0.3)$	$(0.2, 0.3)$	$(0.2, 0.3)$	$(0, 0.9)$
Cost of living	$(0.6, 0.5)$	$(0.3, 0.7)$	$(0.3, 0.7)$	$(0.4, 0.6)$	$(0.1, 0.8)$

Then $(\widetilde{\ddot{W}}, A)$ is a PFSiBCCF of $\mathfrak{R}$. But $(\widetilde{\ddot{W}}, A)$ is not a PFScBCCF of $\mathfrak{R}$ because $(\widetilde{\ddot{W}}, A)$ is not a Crowed-PFScBCCF and Cost of living-PFScBCCF of $\mathfrak{R}$ such as

$$\begin{aligned}\top_{\widetilde{\ddot{W}}[\text{Crowed}]}(\text{Phuket}) &= 0.2\\ &\not\geq 0.7\\ &= \min\{0.7, 0.7\}\\ &= \min\{\top_{\widetilde{\ddot{W}}[\text{Crowed}]}(\text{Bangkok}), \top_{\widetilde{\ddot{W}}[\text{Crowed}]}(\text{Bangkok})\}\\ &= \min\{\top_{\widetilde{\ddot{W}}[\text{Crowed}]}(\text{Bangkok} \star ((\text{Phuket} \star \text{Chiang Rai}) \star \text{Phuket})), \top_{\widetilde{\ddot{W}}[\text{Crowed}]}(\text{Bangkok})\}.\end{aligned}$$

Hence, $\widetilde{\ddot{W}}[\text{Crowed}]$ is not a PFcBCCF of $\mathfrak{R}$, that is, $(\widetilde{\ddot{W}}, A)$ is not a PFScBCCF of $\mathfrak{R}$.

Example 2.28. According to Example 2.27, $(\widetilde{\ddot{W}}, A)$ is a PFSiBCCF of $\mathfrak{R}$. But $(\widetilde{\ddot{W}}, A)$ is not a PFSsBCCF of $\mathfrak{R}$ because $(\widetilde{\ddot{W}}, A)$ is not a Crowed-PFSsBCCF and a Cost of living-PFSsBCCF of $\mathfrak{R}$ such as

$$\begin{aligned}&\perp_{\widetilde{\ddot{W}}[\text{Cost of living}]}(((\text{Phuket} \star \text{Chiang Mai}) \star \text{Chiang Mai}) \star \text{Phuket})\\ &\quad= \perp_{\widetilde{\ddot{W}}[\text{Cost of living}]}(\text{Phuket})\\ &\quad= 0.6\\ &\quad\not\leq 0.5\\ &\quad= \max\{0.5, 0.5\}\\ &\quad= \max\{\perp_{\widetilde{\ddot{W}}[\text{Cost of living}]}(\text{Bangkok}), \perp_{\widetilde{\ddot{W}}[\text{Cost of living}]}(\text{Bangkok})\}\\ &\quad= \max\{\perp_{\widetilde{\ddot{W}}[\text{Cost of living}]}(\text{Bangkok} \star (\text{Chiang Mai} \star \text{Phuket})), \perp_{\widetilde{\ddot{W}}[\text{Cost of living}]}(\text{Bangkok})\}.\end{aligned}$$

Hence, $\widetilde{\ddot{W}}[\text{Cost of living}]$ is not a PFsBCCF of $\mathfrak{R}$, that is, $(\widetilde{\ddot{W}}, A)$ is not a PFSsBCCF of $\mathfrak{R}$.

2.2. Some operations

Theorem 2.29. *The extended intersection of two PFSiBCCFs of $\mathfrak{R}$ is also a PFSiBCCF. Moreover, the intersection of two PFSiBCCFs of $\mathfrak{R}$ is also a PFSiBCCF.*

Proof. Assume $(\widetilde{\ddot{W}}_1, A_1)$ and $(\widetilde{\ddot{W}}_2, A_2)$ are two PFSiBCCFs of $\mathfrak{R}$. We denote $(\widetilde{\ddot{W}}, A_1)\widetilde{\cap}(\widetilde{\ddot{W}}_2, A_2)$ by $(\widetilde{\ddot{W}}, A)$, where $A = A_1 \cup A_2$. Next, let $\nu \in A$.

Case 1: $\nu \in A_1 \setminus A_2$. Then $\widetilde{\ddot{W}}[\nu] = \widetilde{\ddot{W}}_1[\nu]$ is a PFiBCCF of $\mathfrak{R}$.

Case 2: $\nu \in A_2 \setminus A_1$. Then $\widetilde{\ddot{W}}[\nu] = \widetilde{\ddot{W}}_2[\nu]$ is a PFiBCCF of $\mathfrak{R}$.

Case 3: $\nu \in A_1 \cap A_2$. By Theorem 1.10, we have $\widetilde{\ddot{W}}[\nu] = \widetilde{\ddot{W}}_1[\nu] \wedge \widetilde{\ddot{W}}_2[\nu]$ is a PFiBCCF of $\mathfrak{R}$.

Thus $(\widetilde{\ddot{W}}, A)$ is an ν-PFSiBCCF of $\mathfrak{R}$ for each $\nu \in A$. Hence, $(\widetilde{\ddot{W}}, A)$ is a PFSiBCCF of $\mathfrak{R}$. □

Theorem 2.30. *The union of two PFSiBCCFs of $\mathfrak{R}$ is also a PFSiBCCF if sets of statistics of two PFSiBCCFs are disjoint.*

Proof. Assume $(\widetilde{\ddot{W}}_1, A_1)$ and $(\widetilde{\ddot{W}}_2, A_2)$ are two PFSiBCCFs of $\mathfrak{R}$ such that $A_1 \cap A_2 = \emptyset$. We denote $(\widetilde{\ddot{W}}, A_1)\widetilde{\cup}(\widetilde{\ddot{W}}_2, A_2)$ by $(\widetilde{\ddot{W}}, A)$, where $A = A_1 \cup A_2$. Since $A_1 \cap A_2 = \emptyset$, we have $\nu \in A_1 \setminus A_2$ or $\nu \in A_2 \setminus A_1$. Next, let $\nu \in A$.

Case 1: $\nu \in A_1 \setminus A_2$. Then $\widetilde{\ddot{W}}[\nu] = \widetilde{\ddot{W}}_1[\nu]$ is a PFiBCCF of $\mathfrak{R}$.

Case 2: $\nu \in A_2 \setminus A_1$. Then $\widetilde{\ddot{W}}[\nu] = \widetilde{\ddot{W}}_2[\nu]$ is a PFiBCCF of $\mathfrak{R}$.

Thus $(\widetilde{\ddot{W}}, A)$ is an ν-PFSiBCCF of $\mathfrak{R}$ for each $\nu \in A$. Hence, $(\widetilde{\ddot{W}}, A)$ is a PFSiBCCF of $\mathfrak{R}$. □

The example below demonstrates how Theorem 2.30 is invalid if the statistics sets of two PFSiBCCFs are not disjoint.

Example 2.31. Let $\mathfrak{R}$ be a set of 4 musicians, that is, $\mathfrak{R} = \{m_1, m_2, m_3, m_4\}$. Define a binary operation $\star$ on $\mathfrak{R}$ as the following table:

$\star$	m_1	m_2	m_3	m_4
m_1	m_1	m_2	m_3	m_4
m_2	m_1	m_1	m_3	m_3
m_3	m_1	m_2	m_1	m_2
m_4	m_1	m_1	m_1	m_1

Then $\mathfrak{R} = (\mathfrak{R}, \star, m_1)$ is a BCC-algebra. Let $A_1 = \{$Creative thinking, Professionalism$\}$ and $A_2 = \{$Identity, Professionalism$\}$ be sets of properties in $\mathfrak{R}$ and $(\widetilde{\ddot{W}}_1, A_1)$ and $(\widetilde{\ddot{W}}_2, A_2)$ are PFSSs over $\mathfrak{R}$. Then $\widetilde{\ddot{W}}_1$[Creative thinking], $\widetilde{\ddot{W}}_1$[Professionalism], $\widetilde{\ddot{W}}_2$[Identity], and $\widetilde{\ddot{W}}_2$[Professionalism] are PFSs in $\mathfrak{R}$ defined as follows:

$\widetilde{\ddot{W}}_1$	m_1	m_2	m_3	m_4
Creative thinking	$(0.5, 0.6)$	$(0.1, 0.8)$	$(0.4, 0.7)$	$(0.1, 0.8)$
Professionalism	$(0.9, 0.2)$	$(0.4, 0.5)$	$(0.6, 0.4)$	$(0.4, 0.5)$

$\widetilde{\ddot{W}}_2$	m_1	m_2	m_3	m_4
Identity	$(1, 0)$	$(0.2, 0.9)$	$(0.7, 0.2)$	$(0.2, 0.9)$
Professionalism	$(0.6, 0)$	$(0.6, 0)$	$(0.5, 0.4)$	$(0.5, 0.4)$

Then $(\widetilde{\ddot{W}}_1, A_1)$ and $(\widetilde{\ddot{W}}_2, A_2)$ are PFSiBCCFs of $\mathfrak{R}$. Since Professionalism $\in A_1 \cap A_2$, we have

$$\begin{aligned}
\top_{\widetilde{\ddot{W}}_1[\text{Professionalism}] \vee \widetilde{\ddot{W}}_2[\text{Professionalism}]}(m_1 \star m_4) &= \top_{\widetilde{\ddot{W}}_1[\text{Professionalism}] \vee \widetilde{\ddot{W}}_2[\text{Professionalism}]}(m_4) \\
&= 0.5 \\
&\ngeq 0.6 \\
&= \min\{0.6, 0.6\} \\
&= \min\{\top_{\widetilde{\ddot{W}}_1[\text{Professionalism}] \vee \widetilde{\ddot{W}}_2[\text{Professionalism}]}(m_3), \\
\top_{\widetilde{\ddot{W}}_1[\text{Professionalism}] \vee \widetilde{\ddot{W}}_2[\text{Professionalism}]}(m_2)\} &= \min\{\top_{\widetilde{\ddot{W}}_1[\text{Professionalism}] \vee \widetilde{\ddot{W}}_2[\text{Professionalism}]}(m_1 \star (m_2 \star m_4)), \\
&\quad \top_{\widetilde{\ddot{W}}_1[\text{Professionalism}] \vee \widetilde{\ddot{W}}_2[\text{Professionalism}]}(m_1 \star m_2)\}.
\end{aligned}$$

Thus $\widetilde{\ddot{W}}_1$[Professionalism] $\vee$ $\widetilde{\ddot{W}}_2$[Professionalism] is not a PFiBCCF of $\mathfrak{R}$, that is, $(\widetilde{\ddot{W}}_1, A_1)\widetilde{\cup}(\widetilde{\ddot{W}}_2, A_2)$ is not a Professionalism-PFSiBCCF of $\mathfrak{R}$. Hence, $(\widetilde{\ddot{W}}_1, A_1)\widetilde{\cup}(\widetilde{\ddot{W}}_2, A_2)$ is not a PFSiBCCF of $\mathfrak{R}$. Moreover, $(\widetilde{\ddot{W}}_1, A_1)\widetilde{\Cup}(\widetilde{\ddot{W}}_2, A_2)$ is not a PFSiBCCF of $\mathfrak{R}$.

Theorem 2.32. *The extended intersection of two PFScBCCFs of $\mathfrak{R}$ is also a PFScBCCF. Moreover, the intersection of two PFScBCCFs of $\mathfrak{R}$ is also a PFScBCCF.*

Proof. Assume $(\widetilde{\ddot{W}}_1, A_1)$ and $(\widetilde{\ddot{W}}_2, A_2)$ are two PFScBCCFs of $\mathfrak{R}$. We denote $(\widetilde{\ddot{W}}, A_1)\widetilde{\cap}(\widetilde{\ddot{W}}_2, A_2)$ by $(\widetilde{\ddot{W}}, A)$, where $A = A_1 \cup A_2$. Next, let $v \in A$.

Case 1: $v \in A_1 \setminus A_2$. Then $\widetilde{\ddot{W}}[v] = \widetilde{\ddot{W}}_1[v]$ is a PFcBCCF of $\mathfrak{R}$.

Case 2: $v \in A_2 \setminus A_1$. Then $\widetilde{\ddot{W}}[v] = \widetilde{\ddot{W}}_2[v]$ is a PFcBCCF of $\mathfrak{R}$.

Case 3: $v \in A_1 \cap A_2$. By Theorem 1.12, we have $\widetilde{\ddot{W}}[v] = \widetilde{\ddot{W}}_1[v] \wedge \widetilde{\ddot{W}}_2[v]$ is a PFcBCCF of $\mathfrak{R}$.

Thus $(\widetilde{\ddot{W}}, A)$ is an v-PFScBCCF of $\mathfrak{R}$ for each $v \in A$. Hence, $(\widetilde{\ddot{W}}, A)$ is a PFScBCCF of $\mathfrak{R}$. □

Theorem 2.33. *The union of two PFScBCCFs of $\mathfrak{R}$ is also a PFScBCCF if sets of statistics of two PFScBCCFs are disjoint.*

Proof. Assume $(\widetilde{\ddot{W}}_1, A_1)$ and $(\widetilde{\ddot{W}}_2, A_2)$ are two PFScBCCFs of $\mathfrak{R}$ such that $A_1 \cap A_2 = \emptyset$. We denote $(\widetilde{\ddot{W}}, A_1)\widetilde{\cup}(\widetilde{\ddot{W}}_2, A_2)$ by $(\widetilde{\ddot{W}}, A)$, where $A = A_1 \cup A_2$. Since $A_1 \cap A_2 = \emptyset$, we have $\nu \in A_1 \setminus A_2$ or $\nu \in A_2 \setminus A_1$. Next, let $\nu \in A$.

Case 1: $\nu \in A_1 \setminus A_2$. Then $\widetilde{\ddot{W}}[\nu] = \widetilde{\ddot{W}}_1[\nu]$ is a PFcBCCF of $\mathfrak{R}$.

Case 2: $\nu \in A_2 \setminus A_1$. Then $\widetilde{\ddot{W}}[\nu] = \widetilde{\ddot{W}}_2[\nu]$ is a PFcBCCF of $\mathfrak{R}$.

Thus $(\widetilde{\ddot{W}}, A)$ is an ν-PFScBCCF of $\mathfrak{R}$ for each $\nu \in A$. Hence, $(\widetilde{\ddot{W}}, A)$ is a PFScBCCF of $\mathfrak{R}$. □

The example below demonstrates how Theorem 2.33 is invalid if the statistics sets of two PFScBCCFs are not disjoint.

Example 2.34. According to Example 2.31, $(\widetilde{\ddot{W}}_1, A_1)$ and $(\widetilde{\ddot{W}}_2, A_2)$ are PFScBCCFs of $\mathfrak{R}$. Since Professionalism $\in A_1 \cap A_2$, we have

$$\begin{aligned}
\top_{\widetilde{\ddot{W}}_1[\text{Professionalism}]\vee\widetilde{\ddot{W}}_2[\text{Professionalism}]}(m_4) &= 0.5 \\
&\ngeq 0.6 \\
&= \min\{0.6, 0.6\} \\
&= \min\{\top_{\widetilde{\ddot{W}}_1[\text{Professionalism}]\vee\widetilde{\ddot{W}}_2[\text{Professionalism}]}(m_2), \\
\top_{\widetilde{\ddot{W}}_1[\text{Professionalism}]\vee\widetilde{\ddot{W}}_2[\text{Professionalism}]}(m_3)\} &= \min\{\top_{\widetilde{\ddot{W}}_1[\text{Professionalism}]\vee\widetilde{\ddot{W}}_2[\text{Professionalism}]}(m_3 \star ((m_4 \star m_2) \star m_4)), \\
&\quad \top_{\widetilde{\ddot{W}}_1[\text{Professionalism}]\vee\widetilde{\ddot{W}}_2[\text{Professionalism}]}(m_3)\}.
\end{aligned}$$

Thus $\widetilde{\ddot{W}}_1[\text{Professionalism}] \vee \widetilde{\ddot{W}}_2[\text{Professionalism}]$ is not a PFcBCCF of $\mathfrak{R}$, that is, $(\widetilde{\ddot{W}}_1, A_1)\widetilde{\cup}(\widetilde{\ddot{W}}_2, A_2)$ is not a Professionalism-PFScBCCF of $\mathfrak{R}$. Hence, $(\widetilde{\ddot{W}}_1, A_1)\widetilde{\cup}(\widetilde{\ddot{W}}_2, A_2)$ is not a PFScBCCF of $\mathfrak{R}$. Moreover, $(\widetilde{\ddot{W}}_1, A_1)\widetilde{\Cup}(\widetilde{\ddot{W}}_2, A_2)$ is not a PFScBCCF of $\mathfrak{R}$.

Theorem 2.35. *The extended intersection of two PFSsBCCFs of $\mathfrak{R}$ is also a PFSsBCCF. Moreover, the intersection of two PFSsBCCFs of $\mathfrak{R}$ is also a PFSsBCCF.*

Proof. Assume $(\widetilde{\ddot{W}}_1, A_1)$ and $(\widetilde{\ddot{W}}_2, A_2)$ are two PFSsBCCFs of $\mathfrak{R}$. We denote $(\widetilde{\ddot{W}}, A_1)\widetilde{\cap}(\widetilde{\ddot{W}}_2, A_2)$ by $(\widetilde{\ddot{W}}, A)$, where $A = A_1 \cup A_2$. Next, let $\nu \in A$.

Case 1: $\nu \in A_1 \setminus A_2$. Then $\widetilde{\ddot{W}}[\nu] = \widetilde{\ddot{W}}_1[\nu]$ is a PFsBCCF of $\mathfrak{R}$.

Case 2: $\nu \in A_2 \setminus A_1$. Then $\widetilde{\ddot{W}}[\nu] = \widetilde{\ddot{W}}_2[\nu]$ is a PFsBCCF of $\mathfrak{R}$.

Case 3: $\nu \in A_1 \cap A_2$. By Theorem 1.14, we have $\widetilde{\ddot{W}}[\nu] = \widetilde{\ddot{W}}_1[\nu] \wedge \widetilde{\ddot{W}}_2[\nu]$ is a PFsBCCF of $\mathfrak{R}$.

Thus $(\widetilde{\ddot{W}}, A)$ is an ν-PFSsBCCF of $\mathfrak{R}$ for each $\nu \in A$. Hence, $(\widetilde{\ddot{W}}, A)$ is a PFSsBCCF of $\mathfrak{R}$. □

Theorem 2.36. *The union of two PFSsBCCFs of $\mathfrak{R}$ is also a PFSsBCCF if sets of statistics of two PFSsBCCFs are disjoint.*

Proof. Assume $(\widetilde{\ddot{W}}_1, A_1)$ and $(\widetilde{\ddot{W}}_2, A_2)$ are two PFSsBCCFs of $\mathfrak{R}$ such that $A_1 \cap A_2 = \emptyset$. We denote $(\widetilde{\ddot{W}}, A_1)\widetilde{\cup}(\widetilde{\ddot{W}}_2, A_2)$ by $(\widetilde{\ddot{W}}, A)$ where $A = A_1 \cup A_2$. Since $A_1 \cap A_2 = \emptyset$, we have $\nu \in A_1 \setminus A_2$ or $\nu \in A_2 \setminus A_1$. Next, let $\nu \in A$.

Case 1: $\nu \in A_1 \setminus A_2$. Then $\widetilde{\ddot{W}}[\nu] = \widetilde{\ddot{W}}_1[\nu]$ is a PFsBCCF of $\mathfrak{R}$.

Case 2: $\nu \in A_2 \setminus A_1$. Then $\widetilde{\ddot{W}}[\nu] = \widetilde{\ddot{W}}_2[\nu]$ is a PFsBCCF of $\mathfrak{R}$.

Thus $(\widetilde{\ddot{W}}, A)$ is an ν-PFSsBCCF of $\mathfrak{R}$ for each $\nu \in A$. Hence, $(\widetilde{\ddot{W}}, A)$ is a PFSsBCCF of $\mathfrak{R}$. □

The example below demonstrates how Theorem 2.36 is invalid if the statistics sets of two PFSsBCCFs are not disjoint.

Example 2.37. According to Example 2.31, $(\widetilde{\ddot{W}}_1, A_1)$ and $(\widetilde{\ddot{W}}_2, A_2)$ are PFSsBCCFs of $\mathfrak{R}$. Since Professionalism $\in A_1 \cap A_2$, we have

$$\begin{aligned}
&\top_{\widetilde{\ddot{W}}_1[\text{Professionalism}]\vee\widetilde{\ddot{W}}_2[\text{Professionalism}]}(((m_4 \star m_1) \star m_1) \star m_4) \\
&\qquad = \top_{\widetilde{\ddot{W}}_1[\text{Professionalism}]\vee\widetilde{\ddot{W}}_2[\text{Professionalism}]}(m_4) \\
&\qquad = 0.5 \\
&\qquad \ngeq 0.6 \\
&\qquad = \min\{0.6, 0.6\} \\
&\qquad = \min\{\top_{\widetilde{\ddot{W}}_1[\text{Professionalism}]\vee\widetilde{\ddot{W}}_2[\text{Professionalism}]}(m_2), \\
\top_{\widetilde{\ddot{W}}_1[\text{Professionalism}]\vee\widetilde{\ddot{W}}_2[\text{Professionalism}]}(m_3)\} &= \min\{\top_{\widetilde{\ddot{W}}_1[\text{Professionalism}]\vee\widetilde{\ddot{W}}_2[\text{Professionalism}]}(m_3 \star (m_1 \star m_4)), \\
&\qquad \top_{\widetilde{\ddot{W}}_1[\text{Professionalism}]\vee\widetilde{\ddot{W}}_2[\text{Professionalism}]}(m_3)\}.
\end{aligned}$$

Thus $\widetilde{\ddot{W}}_1[\text{Professionalism}] \vee \widetilde{\ddot{W}}_2[\text{Professionalism}]$ is not a PFsBCCF of $\mathfrak{R}$, that is, $(\widetilde{\ddot{W}}_1, A_1)\widetilde{\cup}(\widetilde{\ddot{W}}_2, A_2)$ is not a Professionalism-PFSsBCCF of $\mathfrak{R}$. Hence, $(\widetilde{\ddot{W}}_1, A_1)\widetilde{\cup}(\widetilde{\ddot{W}}_2, A_2)$ is not a PFSsBCCF of $\mathfrak{R}$. Moreover, $(\widetilde{\ddot{W}}_1, A_1)\widetilde{\Cup}(\widetilde{\ddot{W}}_2, A_2)$ is not a PFSsBCCF of $\mathfrak{R}$.

2.3. π-Level subset

Theorem 2.38. *$(\widetilde{\ddot{W}}, A)$ is a PFSiBCCF of $\mathfrak{R}$ if and only if $U(\top_{\widetilde{\ddot{W}}[\nu]}, \pi)$ and $L(\perp_{\widetilde{\ddot{W}}[\nu]}, \pi)$ are iBCCFs for every $\nu \in A, \pi \in [0,1]$ if they are nonempty.*

Proof. Assume $(\widetilde{\ddot{W}}, A)$ is a PFSiBCCF of $\mathfrak{R}$, that is, $\widetilde{\ddot{W}}[\nu] = (\top_{\widetilde{\ddot{W}}[\nu]}, \perp_{\widetilde{\ddot{W}}[\nu]})$ is a PFiBCCF of $\mathfrak{R}$ for each $\nu \in A$. Let $\pi \in [0,1]$ be such that $U(\top_{\widetilde{\ddot{W}}[\nu]}, \pi), L(\perp_{\widetilde{\ddot{W}}[\nu]}, \pi) \neq \emptyset$. By Theorem 1.7, we have $U(\top_{\widetilde{\ddot{W}}[\nu]}, \pi)$ and $L(\perp_{\widetilde{\ddot{W}}[\nu]}, \pi)$ are iBCCFs of $\mathfrak{R}$ for each $\nu \in A, \pi \in [0,1]$.

Conversely, assume for each $\nu \in A, \pi \in [0,1], U(\top_{\widetilde{\ddot{W}}[\nu]}, \pi)$ and $L(\perp_{\widetilde{\ddot{W}}[\nu]}, \pi)$ are iBCCFs of $\mathfrak{R}$ if they are nonempty. By Theorem 1.7, we have $\widetilde{\ddot{W}}[\nu] = (\top_{\widetilde{\ddot{W}}[\nu]}, \perp_{\widetilde{\ddot{W}}[\nu]})$ is a PFiBCCF of $\mathfrak{R}$ for each $\nu \in A$. Hence, $(\widetilde{\ddot{W}}, A)$ is a PFSiBCCF of $\mathfrak{R}$. □

Theorem 2.39. *$(\widetilde{\ddot{W}}, A)$ is a PFSiBCCF of $\mathfrak{R}$ if and only if $U^+(\top_{\widetilde{\ddot{W}}[\nu]}, \pi)$ and $L^-(\perp_{\widetilde{\ddot{W}}[\nu]}, \pi)$ are iBCCFs for every $\nu \in A, \pi \in [0,1]$ if they are nonempty.*

Proof. Assume $(\widetilde{\ddot{W}}, A)$ is a PFSiBCCF of $\mathfrak{R}$, that is, $\widetilde{\ddot{W}}[\nu] = (\top_{\widetilde{\ddot{W}}[\nu]}, \perp_{\widetilde{\ddot{W}}[\nu]})$ is a PFiBCCF of $\mathfrak{R}$ for each $\nu \in A$. Let $\pi \in [0,1]$ be such that $U^+(\top_{\widetilde{\ddot{W}}[\nu]}, \pi), L^-(\perp_{\widetilde{\ddot{W}}[\nu]}, \pi) \neq \emptyset$. By Theorem 1.8, we have $U^+(\top_{\widetilde{\ddot{W}}[\nu]}, \pi)$ and $L^-(\perp_{\widetilde{\ddot{W}}[\nu]}, \pi)$ are iBCCFs of $\mathfrak{R}$ for each $\nu \in A, \pi \in [0,1]$.

Conversely, assume for each $\nu \in A, \pi \in [0,1], U^+(\top_{\widetilde{\ddot{W}}[\nu]}, \pi)$ and $L^-(\perp_{\widetilde{\ddot{W}}[\nu]}, \pi)$ are iBCCFs of $\mathfrak{R}$ if they are nonempty. By Theorem 1.8, we have $\widetilde{\ddot{W}}[\nu] = (\top_{\widetilde{\ddot{W}}[\nu]}, \perp_{\widetilde{\ddot{W}}[\nu]})$ is a PFiBCCF of $\mathfrak{R}$ for each $\nu \in A$. Hence, $(\widetilde{\ddot{W}}, A)$ is a PFSiBCCF of $\mathfrak{R}$. □

Theorem 2.40. *$(\widetilde{\ddot{W}}, A)$ is a PFScBCCF of $\mathfrak{R}$ if and only if $U(\top_{\widetilde{\ddot{W}}[\nu]}, \pi)$ and $L(\perp_{\widetilde{\ddot{W}}[\nu]}, \pi)$ are cBCCFs for every $\nu \in A, \pi \in [0,1]$ if they are nonempty.*

Proof. Assume $(\widetilde{\ddot{W}}, A)$ is a PFScBCCF of $\mathfrak{R}$, that is, $\widetilde{\ddot{W}}[\nu] = (\top_{\widetilde{\ddot{W}}[\nu]}, \perp_{\widetilde{\ddot{W}}[\nu]})$ is a PFcBCCF of $\mathfrak{R}$ for each $\nu \in A$. Let $\pi \in [0,1]$ be such that $U(\top_{\widetilde{\ddot{W}}[\nu]}, \pi), L(\perp_{\widetilde{\ddot{W}}[\nu]}, \pi) \neq \emptyset$. By Theorem 1.7, we have $U(\top_{\widetilde{\ddot{W}}[\nu]}, \pi)$ and $L(\perp_{\widetilde{\ddot{W}}[\nu]}, \pi)$ are cBCCFs of $\mathfrak{R}$ for each $\nu \in A, \pi \in [0,1]$.

Conversely, assume for each $\nu \in A, \pi \in [0,1], U(\top_{\widetilde{\ddot{W}}[\nu]}, \pi)$ and $L(\perp_{\widetilde{\ddot{W}}[\nu]}, \pi)$ are cBCCFs of $\mathfrak{R}$ if they are nonempty. By Theorem 1.7, we have $\widetilde{\ddot{W}}[\nu] = (\top_{\widetilde{\ddot{W}}[\nu]}, \perp_{\widetilde{\ddot{W}}[\nu]})$ is a PFcBCCF of $\mathfrak{R}$ for each $\nu \in A$. Hence, $(\widetilde{\ddot{W}}, A)$ is a PFScBCCF of $\mathfrak{R}$. □

Theorem 2.41. *$(\widetilde{\ddot{W}}, A)$ is a PFScBCCF of $\mathfrak{R}$ if and only if $U^+(\top_{\widetilde{\ddot{W}}[\nu]}, \pi)$ and $L^-(\perp_{\widetilde{\ddot{W}}[\nu]}, \pi)$ are cBCCFs for every $\nu \in A, \pi \in [0,1]$ if they are nonempty.*

Proof. Assume $(\widetilde{\ddot{W}}, A)$ is a PFScBCCF of $\mathfrak{R}$, that is, $\widetilde{\ddot{W}}[\nu] = (\top_{\widetilde{\ddot{W}}[\nu]}, \perp_{\widetilde{\ddot{W}}[\nu]})$ is a PFcBCCF of $\mathfrak{R}$ for each $\nu \in A$. Let $\pi \in [0,1]$ be such that $U^+(\top_{\widetilde{\ddot{W}}[\nu]}, \pi), L^-(\perp_{\widetilde{\ddot{W}}[\nu]}, \pi) \neq \emptyset$. By Theorem 1.8, we have $U^+(\top_{\widetilde{\ddot{W}}[\nu]}, \pi)$ and $L^-(\perp_{\widetilde{\ddot{W}}[\nu]}, \pi)$ are cBCCFs of $\mathfrak{R}$ for each $\nu \in A, \pi \in [0,1]$.

Conversely, assume for each $\nu \in A, \pi \in [0,1], U^+(\top_{\widetilde{\ddot{W}}[\nu]}, \pi)$ and $L^-(\perp_{\widetilde{\ddot{W}}[\nu]}, \pi)$ are cBCCFs of $\mathfrak{R}$ if they are nonempty. By Theorem 1.8, we have $\widetilde{\ddot{W}}[\nu] = (\top_{\widetilde{\ddot{W}}[\nu]}, \perp_{\widetilde{\ddot{W}}[\nu]})$ is a PFcBCCF of $\mathfrak{R}$ for each $\nu \in A$. Hence, $(\widetilde{\ddot{W}}, A)$ is a PFScBCCF of $\mathfrak{R}$. □

Theorem 2.42. *$(\widetilde{\ddot{W}}, A)$ is a PFSsBCCF of $\mathfrak{R}$ if and only if $U(\top_{\widetilde{\ddot{W}}[\nu]}, \pi)$ and $L(\perp_{\widetilde{\ddot{W}}[\nu]}, \pi)$ are sBCCFs for every $\nu \in A, \pi \in [0,1]$ if they are nonempty.*

Proof. Assume $(\widetilde{\ddot{W}}, A)$ is a PFSsBCCF of $\mathfrak{R}$, that is, $\widetilde{\ddot{W}}[\nu] = (\top_{\widetilde{\ddot{W}}[\nu]}, \perp_{\widetilde{\ddot{W}}[\nu]})$ is a PFsBCCF of $\mathfrak{R}$ for each $\nu \in A$. Let $\pi \in [0,1]$ be such that $U(\top_{\widetilde{\ddot{W}}[\nu]}, \pi), L(\perp_{\widetilde{\ddot{W}}[\nu]}, \pi) \neq \emptyset$. By Theorem 1.7, we have $U(\top_{\widetilde{\ddot{W}}[\nu]}, \pi)$ and $L(\perp_{\widetilde{\ddot{W}}[\nu]}, \pi)$ are sBCCFs of $\mathfrak{R}$ for each $\nu \in A, \pi \in [0,1]$.

Conversely, assume for each $\nu \in A, \pi \in [0,1], U(\top_{\widetilde{\ddot{W}}[\nu]}, \pi)$ and $L(\perp_{\widetilde{\ddot{W}}[\nu]}, \pi)$ are sBCCFs of $\mathfrak{R}$ if they are nonempty. By Theorem 1.7, we have $\widetilde{\ddot{W}}[\nu] = (\top_{\widetilde{\ddot{W}}[\nu]}, \perp_{\widetilde{\ddot{W}}[\nu]})$ is a PFsBCCF of $\mathfrak{R}$ for each $\nu \in A$. Hence, $(\widetilde{\ddot{W}}, A)$ is a PFSsBCCF of $\mathfrak{R}$. □

Theorem 2.43. *$(\widetilde{\ddot{W}}, A)$ is a PFSsBCCF of $\mathfrak{R}$ if and only if $U^+(\top_{\widetilde{\ddot{W}}[\nu]}, \pi)$ and $L^-(\perp_{\widetilde{\ddot{W}}[\nu]}, \pi)$ are sBCCFs for every $\nu \in A, \pi \in [0,1]$ if they are nonempty.*

Proof. Assume $(\widetilde{\ddot{W}}, A)$ is a PFSsBCCF of $\mathfrak{R}$, that is, $\widetilde{\ddot{W}}[\nu] = (\top_{\widetilde{\ddot{W}}[\nu]}, \perp_{\widetilde{\ddot{W}}[\nu]})$ is a PFsBCCF of $\mathfrak{R}$ for each $\nu \in A$. Let $\pi \in [0,1]$ be such that $U^+(\top_{\widetilde{\ddot{W}}[\nu]}, \pi), L^-(\perp_{\widetilde{\ddot{W}}[\nu]}, \pi) \neq \emptyset$. By Theorem 1.8, we have $U^+(\top_{\widetilde{\ddot{W}}[\nu]}, \pi)$ and $L^-(\perp_{\widetilde{\ddot{W}}[\nu]}, \pi)$ are sBCCFs of $\mathfrak{R}$ for each $\nu \in A, \pi \in [0,1]$.

Conversely, assume for each $\nu \in A, \pi \in [0,1], U^+(\top_{\widetilde{\ddot{W}}[\nu]}, \pi)$ and $L^-(\perp_{\widetilde{\ddot{W}}[\nu]}, \pi)$ are sBCCFs of $\mathfrak{R}$ if they are nonempty. By Theorem 1.8, we have $\widetilde{\ddot{W}}[\nu] = (\top_{\widetilde{\ddot{W}}[\nu]}, \perp_{\widetilde{\ddot{W}}[\nu]})$ is a PFsBCCF of $\mathfrak{R}$ for each $\nu \in A$. Hence, $(\widetilde{\ddot{W}}, A)$ is a PFSsBCCF of $\mathfrak{R}$. □

3. Conclusions and future works

In this paper, we have introduced the new concepts of PFSSs over BCC-algebras, and then we have introduced three types of PFSSs over BCC-algebras, namely PFSiBCCFs, PFScBCCFs, and PFSsBCCFs. We have that PFSBCCSs are a generalization of PFSNBCCFs, PFSNBCCFs are a generalization of PFSBCCFs, PFSBCCFs are a generalization of PFSBCCIs, PFSBCCFs are a generalization of PFScBCCFs, PFSBCCFs are a generalization of PFSsBCCFs, PFSBCCIs are a generalization of PFSiBCCFs, PFSiBCCFs are a generalization of PFSsBCCIs, PFScBCCFs are a generalization of PFSsBCCIs, and PFSsBCCFs are a generalization of PFSsBCCIs. PFSsBCCIs and CPFSSs also coincide. As a result, we obtained Figure 3 that illustrates the generalization of PFSSs over BCC-algebras.

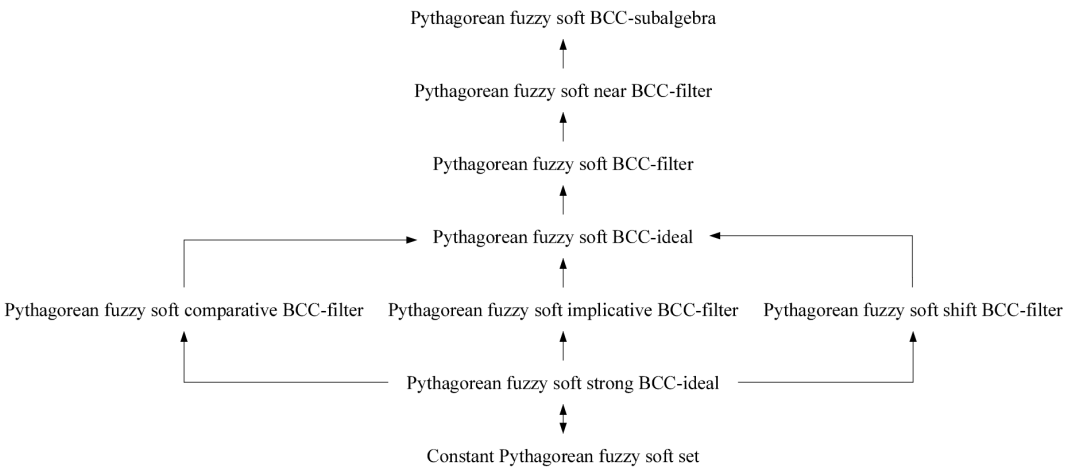

Figure 3: All PFSSs over BCC-algebras.

After, we found that the (extended) intersection of two PFSiBCCFs (resp., PFScBCCFs, PFSsBCCFs) is also a PFSiBCCF (resp., PFScBCCF, PFSsBCCF) but the (restricted) union is not satisfied.

Finally, we connected between the new concepts of PFSSs and special subset of BCC-algebras under upper π-level subsets, upper π-strong level subsets, lower π-level subsets, lower π-strong level subsets, and equal π-level subset of PFSs.

Research topics that will expand on this study in the near future include:

(1) to study Fermatean fuzzy soft sets based on the concept of Senapati and Yager [36];

(2) to introduce the concept of bipolar Pythagorean fuzzy soft sets based on the concept of Jana and Pal [11];

(3) to study Pythagorean fuzzy sets based on Pythagorean fuzzy points and Pythagorean fuzzy numbers according to Jana et al.'s approach [12, 13].

Acknowledgments

This research project was supported by the Thailand Science Research and Innovation Fund and the University of Phayao (Grant No. FF66-UoE017).

References

[1] M. A. Ansari, A. Haidar, A. N. A. Koam, *On a graph associated to UP-algebras*, Math. Comput. Appl., **23** (2018), 12 pages. 1

[2] M. A. Ansari, A. N. A. Koam, A. Haider, *Rough set theory applied to UP-algebras*, Ital. J. Pure Appl. Math., **42** (2019), 388–402. 1

[3] K. T. Atanassov, *Intuitionistic fuzzy sets*, Fuzzy Sets Syst., **20** (1986), 87–96. 1
[4] N. Dokkhamdang, A. Kesorn, A. Iampan, *Generalized fuzzy sets in UP-algebras*, Ann. Fuzzy Math. Inform., **16** (2018), 171–190. 1
[5] T. Guntasow, S. Sajak, A. Jomkham, A. Iampan, *Fuzzy translations of a fuzzy set in UP-algebras*, J. Indones. Math. Soc., **23** (2017), 1–19. 1.2
[6] Y. Huang, *BCI-algebra*, Science Press, Beijing, (2006). 1.1
[7] A. Iampan, *A new branch of the logical algebra: UP-algebras*, J. Algebra Relat. Topics, **5** (2017), 35–54. 1, 1, 1.2
[8] A. Iampan, *Introducing fully UP-semigroups*, Discuss. Math., Gen. Algebra Appl., **38** (2018), 297–306. 1
[9] A. Iampan, *Multipliers and near UP-filters of UP-algebras*, J. Discrete Math. Sci. Cryptography, **24** (2021), 667–680. 1.2
[10] A. Iampan, M. Songsaeng, G. Muhiuddin, *Fuzzy duplex UP-algebras*, Eur. J. Pure Appl. Math., **13** (2020), 459–471. 1
[11] C. Jana, M. Pal, *Application of bipolar intuitionistic fuzzy soft sets in decision making problem*, Int. J. Fuzzy Syst. Appl., **7** (2018), 32–55. (2)
[12] C. Jana, M. Pal, *Extended bipolar fuzzy EDAS approach for multi-criteria group decision-making process*, Comput. Appl. Math., **40** (2021), 15 pages. (3)
[13] C. Jana, T. Senapati, K. P. Shum, M. Pal, *Bipolar fuzzy soft subalgebras and ideals of BCK/BCI-algebras based on bipolar fuzzy points*, J. Intell. Fuzzy Syst., **37** (2019), 2785–2795. (3)
[14] Y. B. Jun, B. Brundha, N. Rajesh, R. Bandaru, *$(3,2)$-Fuzzy UP (BCC)-subalgebras and $(3,2)$-fuzzy UP (BCC)-filters*, J. Mahani Math. Res. Cent., **11** (2022), 1–14. 1
[15] Y. B. Jun, A. Iampan, *Comparative and allied UP-filters*, Lobachevskii J. Math., **40** (2019), 60–66. 1.2
[16] Y. B. Jun, A. Iampan, *Implicative UP-filters*, Afr. Mat., **30** (2019), 1093–1101.
[17] Y. B. Jun, A. Iampan, *Shift UP-filters and decompositions of UP-filters in UP-algebras*, Missouri J. Math. Sci., **31** (2019), 36–45. 1.2
[18] Y. Komori, *The class of BCC-algebras is not a variety*, Math. Japon., **29** (1984), 391–394. 1
[19] P. K. Maji, R. Biswas, A. R. Roy, *Fuzzy soft sets*, J. Fuzzy Math., **9** (2001), 589–602. 1
[20] D. Molodtsov, *Soft set theory—first results*, Comput. Math. Appl., **37** (1999), 19–31. 1, 2.1
[21] X. Peng, Y. Yang, J. Song, Y. Jiang, *Pythagorean fuzzy soft set and its application*, Comput. Eng., **41** (2015), 224–229. 1, 2.4, 2.5, 2.6, 2.7
[22] A. Rehman, S. Abdullah, M. Aslam, M. S. Kamran, *A study on fuzzy soft set and its operations*, Ann. Fuzzy Math. Inform., **6** (2013), 339–362. 1
[23] A. Satirad, R. Chinram, A. Iampan, *Pythagorean fuzzy sets in UP-algebras and approximations*, AIMS Math., **6** (2021), 6002–6032. 1.5
[24] A. Satirad, R. Chinram, P. Julatha, R. Prasertpong, A. Iampan, *New types of rough Pythagorean fuzzy UP-filters of UP-algebras*, J. Math. Comput. Sci., **28** (2022), 236–257. 1, 1
[25] A. Satirad, R. Chinram, P. Julatha, A. Iampan, *Pythagorean fuzzy implicative/comparative/shift UP-filters of UP-algebras with approximations*, (revised). 1.5
[26] A. Satirad, R. Chinram, P. Julatha, A. Iampan, *Rough Pythagorean fuzzy sets in UP-algebras*, Eur. J. Pure Appl. Math., **15** (2022), 169–198. 1
[27] A. Satirad, A. Iampan, *Fuzzy sets in fully UP-semigroups*, Ital. J. Pure Appl. Math., **42** (2019), 539–558. 1
[28] A. Satirad, A. Iampan, *Fuzzy soft sets over fully UP-semigroups*, Eur. J. Pure Appl. Math., **12** (2019), 294–331. 1
[29] A. Satirad, A. Iampan, *Properties of operations for fuzzy soft sets over fully UP-semigroups*, Int. J. Anal. Appl., **17** (2019), 821–837. 1
[30] A. Satirad, P. Mosrijai, A. Iampan, *Formulas for finding UP-algebras*, Int. J. Math. Comput. Sci., **14** (2019), 403–409. 1
[31] A. Satirad, P. Mosrijai, A. Iampan, *Generalized power UP-algebras*, Int. J. Math. Comput. Sci., **14** (2019), 17–25. 1
[32] A. Satirad, P. Mosrijai, W. Kamti, A. Iampan, *Level subsets of a hesitant fuzzy set on UP-algebras*, Ann. Fuzzy Math. Inform., **14** (2017), 279–302. 1
[33] A. Satirad, R. Prasertpong, P. Julatha, R. Chinram, A. Iampan, *Pythagorean fuzzy soft sets over UP-algebras*, J. Appl. Math. Inform., (accepted). 1, 2.2, 2.3, 2, 2.6, 2.7
[34] T. Senapati, Y. B. Jun, K. P. Shum, *Cubic set structure applied in* UP*-algebras*, Discrete Math. Algorithms Appl., **10** (2018), 23 pages. 1
[35] T. Senapati, G. Muhiuddin, K. P. Shum, *Representation of UP-algebras in interval-valued intuitionistic fuzzy environment*, Ital. J. Pure Appl. Math., **38** (2017), 497–518. 1
[36] T. Senapati, R. R. Yager, *Fermatean fuzzy sets*, J. Ambient Intell. Human. Comput., **11** (2020), 663–674. (1)
[37] J. Somjanta, N. Thuekaew, P. Kumpeangkeaw, A. Iampan, *Fuzzy sets in UP-algebras*, Ann. Fuzzy Math. Inform., **12** (2016), 739–756. 1.2, 1.6
[38] V. Torra, *Hesitant fuzzy sets*, Int. J. Intell. Syst., **25** (2010), 529–539. 1
[39] V. Torra, Y. Narukawa, *On hesitant fuzzy sets and decision*, 18th IEEE Int. Conf. Fuzzy Syst., (2009), 1378–1382. 1
[40] M. Touqeer, *Intuitionistic fuzzy soft set theoretic approaches to α-ideals in BCI-algebras*, Fuzzy Inf. Eng., **12** (2020), 150–180. 1

[41] R. R. Yager, *Pythagorean fuzzy subsets*, 2013 Jt. IFSA World Congr. NAFIPS Annu. Meet. (IFSA/NAFIPS), Edmomton, Canada, (2013), 57–61. 1, 1, 1.4, 1.9
[42] R. R. Yager, A. M. Abbasov, *Pythagorean member grades, complex numbers, and decision making*, Int. J. Intell. Syst., **28** (2013), 436–452. 1, 1.4
[43] L. A. Zadeh, *Fuzzy sets*, Inf. Control, **8** (1965), 338–353. 1, 1.3